Member IMC Group
Tungaloy

TUNGFORCE

TUNGALOY ACCELERATED MACHINING

NEW PRODUCTS

Member IMC Group Tungaloy

ACCELERATED MACHINING

In an accelerated world, a quick response to market needs is necessary. As a pioneer in innovation, Tungaloy leads the market in developing unique and powerful grades and geometries for this new era. TunGForce, our newest line of products is designed for accelerated machining, bringing you the newest and greatest solutions for your machining needs.

Check our site and our App to get more info!

TUNGFORCE GROOVE 164

TUNGFORCE DRILL 210

FORCE PREMIUMGTEC

Tungaloy offers superior grades for machining all types of material with its innovative CBN, PCD, Ceramic, Cermet grades and superior CVD and PVD coated carbide grades.

The new generation and improved **PremiumGTec CVD grades** with post surface treatment enable higher cutting speeds for machining steel, and the newest **PremiumGTec grades** with post treatment for machining cast iron. **PremiumGTec grades** are PVD coated intended for machining stainless steel at accelerated machining rates.

Grade	Coating: Main composition	Coating: Thickness / um	Coating	Application	Features	Milling	Turning	Grooving	Drilling
AH3135 P30-40 M30-40	TiAlN	4	PVD	P M	- High fracture resistance - Ideal for machining steel and stainless steel under general conditions				
AH110 P05-15 H10-20	TiAlN	3	PVD	P H	- High wear resistance - Suitable for finishing steel and high-hardened material				
AH120 K15-30 P20-30	TiAlN	3	PVD	P K	- Good balance between wear and fracture resistance - Suitable for machining cast iron under general conditions				
AH130 M25-35 P30-40	TiAlN	3	PVD	M P	- High chipping and fracture resistance - Designed for machining austenitic stainless steel under general conditions				
AH3035 P25-35 H20-30	TiAlN	5	PVD	P H	- Good balance between chipping and wear resistance - Suitable for machining high-hardened material at high feed				
AH710 P05-15 K05-20 H10-20	TiAlN	3	PVD	P K H	- High wear resistance - Ideal for finishing cast iron and high-hardened material				
AH725 P20-30 M20-30 K30-35	TiAlN	2	PVD	P M K	- Good balance between wear and chipping resistance - Suitable for machining steel and stainless steel under general conditions				
AH9030 P20-35 K10-25	TiAlN	5	PVD	P K	- High wear resistance - Designed for drilling steel and cast iron at high speed				
AH6030 M15-30 S15-30	TiAlN	5	PVD	M S	- High fracture resistance - Ideal for drilling stainless steel and super alloys under general conditions				
AH8005 S01-10	(Al,Ti)N	3.5	PVD	S	- High wear and welding resistance - Excellent for machining heat-resistant alloys at high speed				
AH8015 S10-20	(Al,Ti)N	3.5	PVD	S	- Good balance between wear and fracture resistance - Suitable for machining heat-resistant alloys under general conditions				
T515 K10-20	TiCN-Al203	16	CVD	K	- High wear resistant that allows high cutting speed - Superior performance on rough machining of cast iron				
NS9530	-	-	Cer-met	P	- High fracture resistance that provides stable tool life and good surface finish - Suitable for steel from finishing to medium cutting				
GT9530	TiAlN	3	PVD	P	- High wear resistance - Ideal for finishing with good surface quality				
M714B S01-10	-	-	-	S	- High wear resistance and thermostability - Suitable for high-speed machining of Inconel				

The whole universe is constantly undergoing a sweeping change and so is the world of machining. The need for new products is the driving force behind technological developments, which generates the demand for complex materials and machining solutions. **Tungaloy** is introducing its **TunGForce MillLine** of new milling products that enables you to Feed the Speed and achieve **Accelerated Machining** for high economic efficiency and productivity. Clearly, the **TUNGFORCE** behind this success is the combination of the outstanding **Grade** and insert **Geometry**.

MillLine

DoForce-Tri
TUNGALOY

Cost-effective shoulder milling cutter for high productivity

DoForce-Tri is a new series of tools with double-sided triangular insert performing general milling applications with superior advantages.

- The insert features **6 cutting edges** with cutting edge full usable length for larger depth of cut up to 11 mm (0.433”)

- **Compact chip formation** due to concave cutting edge.

- NMJ type’s chip splitter produces small chips and helps reduce chatter in demanding applications.

- **Long wiper edge** achieves good surface finish.

- The insert’s triangular shape provides **high rigidity**.

TUNGFORCE MILL
ACCELERATED MACHINING

Line up:

Inserts:
Radius type **TNMU…R16**: Suitable for roughing with depth of cut up to 11 mm (0.433")
Wiper type **TNGU…**: Suitable for general machining with depth of cut up to 11 mm (0.433")

Cutter bodies:
Shank type **EPTN**: Available in metric and inch shanks
Bore type **TPTN**: Available in metric, JIS, and inch bore types in coarse- and close-pitch designs

Chipbreaker edge geometries:
MJ: General chipbreaker for all materials
NMJ: Cutting edge with chip splitter suitable for long overhang application

Grades:
The newest **AH3135** and the popular **AH120** suitable for machining all materials.


TNMU-MJ


TNGU-MJ


TNGU-NMJ

CUTTER - BORE TYPE

DoForce-Tri TPTN12

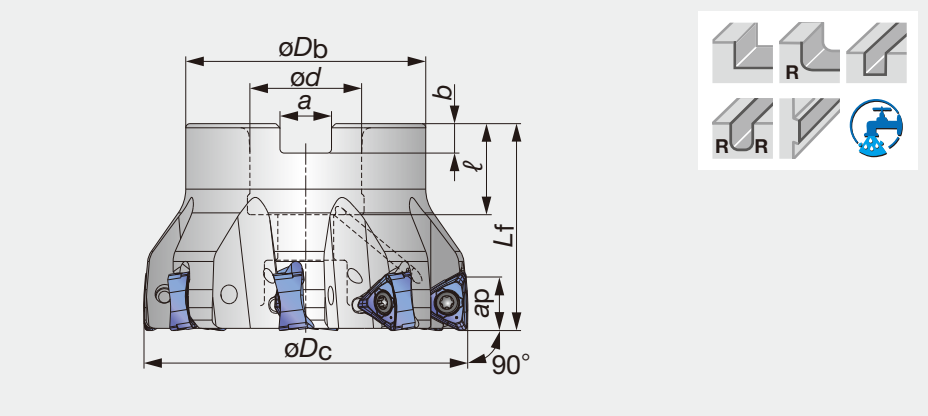

Designation	Max. ap	øDc	z	øDb	Lf	ød	ℓ	a	b	Kg	C.bolt	Insert
TPTN12M050B22.0R04	11	50.00	4	47	40.0	22.000	20.00	10.40	6.30	0.40	CM10X30H	TN*U12
TPTN12M050B22.0R05	11	50.00	5	47	40.0	22.000	20.00	10.40	6.30	0.40	CM10X30H	TN*U12
TPTN12M063B22.0R05	11	63.00	5	47	40.0	22.000	20.00	10.40	6.30	0.60	CM10X30H	TN*U12
TPTN12M063B22.0R06	11	63.00	6	47	40.0	22.000	20.00	10.40	6.30	0.60	CM10X30H	TN*U12
TPTN12J080B25.4R06	11	80.00	6	58	50.0	25.400	26.00	9.50	6.00	1.10	CM12X30H	TN*U12
TPTN12J080B25.4R08	11	80.00	8	58	50.0	25.400	26.00	9.50	6.00	1.10	CM12X30H	TN*U12
TPTN12M080B27.0R06	11	80.00	6	58	50.0	27.000	22.00	12.40	7.00	1.10	CM12X30H	TN*U12
TPTN12M080B27.0R08	11	80.00	8	58	50.0	27.000	22.00	12.40	7.00	1.10	CM12X30H	TN*U12
TPTN12J100B31.7R07	11	100.00	7	67	50.0	31.750	32.00	12.70	8.00	1.40	TMBA-M16H	TN*U12
TPTN12J100B31.7R10	11	100.00	10	67	50.0	31.750	32.00	12.70	8.00	1.40	TMBA-M16H	TN*U12
TPTN12M100B32.0R07	11	100.00	7	67	50.0	32.000	28.50	14.40	8.00	1.40	TMBA-M16H	TN*U12
TPTN12M100B32.0R10	11	100.00	10	67	50.0	32.000	28.50	14.40	8.00	1.40	TMBA-M16H	TN*U12
TPTN12J125B38.1R08	11	125.00	8	71	63.0	38.100	38.00	15.90	10.00	2.40	TMBA-M20H	TN*U12
TPTN12J125B38.1R12	11	125.00	12	71	63.0	38.100	38.00	15.90	10.00	2.50	TMBA-M20H	TN*U12
TPTN12M125B40.0R08	11	125.00	8	71	63.0	40.000	32.00	16.40	9.00	2.30	TMBA-M20H	TN*U12
TPTN12M125B40.0R12	11	125.00	12	71	63.0	40.000	32.00	16.40	9.00	2.40	TMBA-M20H	TN*U12

SPARE PARTS

Clamping screw	Wrench	
	Torx Bit	Grip
CSPB-3.5	BLDIP15/S7	H-TB2W

Square shoulder milling cutters with double-sided triangular insert

CUTTER - SHANK TYPE

DoForce-Tri EPTN12

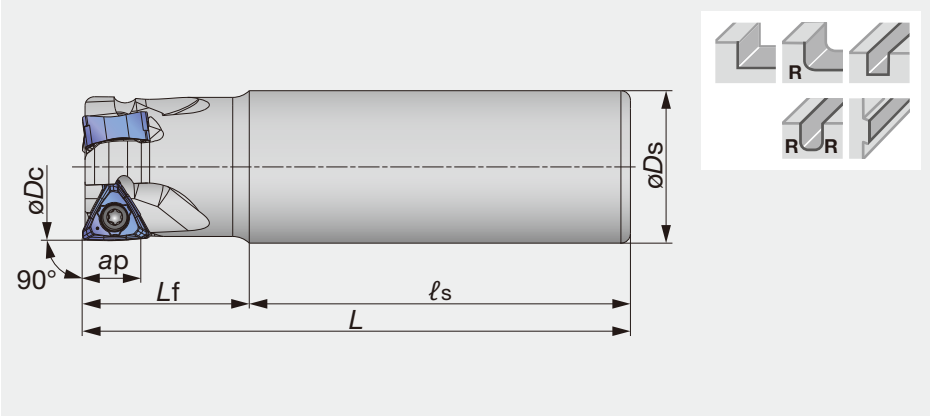

Designation	Max. ap	øDc	z	øDs	ℓs	Lf	L	Kg	Insert
EPTN12M032C32.0R02N	11	32.00	2	32.0	80.0	35.0	115.0	0.70	TN*U12
EPTN12M032C32.0R03N	11	32.00	3	32.0	80.0	35.0	115.0	0.70	TN*U12
EPTN12M040C32.0R03N	11	40.00	3	32.0	80.0	35.0	115.0	0.80	TN*U12
EPTN12M040C32.0R04N	11	40.00	4	32.0	80.0	35.0	115.0	0.80	TN*U12

SPARE PARTS

Clamping screw	Wrench	
	Torx Bit	Grip
CSPB-3.5	BLDIP15/S7	H-TB2W

INSERTS

TNGU-MJ

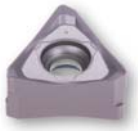

TNGU-NMJ

TNMU-MJ

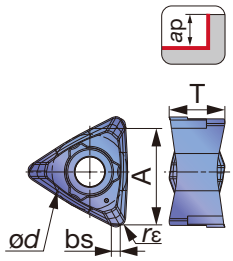

Designation	Max. ap	A	ød	T	rε	bs	AH3135				AH120			
							P	M	K	S	P	M	K	S
TNGU120708PER-MJ	11	12.0	9.525	7.04	0.80	1.16	●	●			○		●	●
TNGU120708PER-NMJ	11	12.0	9.525	7.04	0.80	1.16	●	●			○		●	●
TNMU1207R16PER-MJ	11	12.0	9.525	7.04	1.60	-	●	●			○		●	●

● First choice

Note: See page 9 for more information about grades.

STANDARD CUTTING CONDITIONS

ISO	Workpiece materials	Hardness	Priority	Grades	Chip-breaker	Cutting speed *Vc* (m/min)	Feed per tooth *fz* (mm/t)
P	Low carbon steel (S15C / C15E4, SS400 / E275A, etc.)	- 300 HB	First choice	AH3135	MJ	100 - 250	0.08 - 0.3
		- 300 HB	For low cutting force	AH3135	NMJ	100 - 250	0.08 - 0.14
	Carbon steel and alloy steel (S55C / C55, SCM440 / 42CrMo4, etc.)	- 300 HB	First choice	AH3135	MJ	100 - 230	0.08 - 0.3
		- 300 HB	For low cutting force	AH3135	NMJ	100 - 230	0.08 - 0.14
	Prehardened steel (NAK80, PX5, etc.)	30 - 40 HRC	First choice	AH3135	MJ	100 - 180	0.08 - 0.25
		30 - 40 HRC	For low cutting force	AH3135	NMJ	100 - 180	0.08 - 0.14
M	Stainless steel (SUS304 / X5CrNi18-9, SUS316 / X5CrNiMo17-12-3, etc.)	-	First choice	AH3135	MJ	90 - 200	0.08 - 0.25
		-	For low cutting force	AH3135	NMJ	90 - 200	0.08 - 0.14
K	Grey cast iron (FC250 / 250, FC300 / 300, etc.)	150 - 250 HB	First choice	AH120	MJ	140 - 250	0.08 - 0.3
		150 - 250 HB	For low cutting force	AH120	NMJ	140 - 250	0.08 - 0.14
	Ductile cast iron (FCD400, FCD600 / 600-3, etc.)	150 - 250 HB	First choice	AH120	MJ	110 - 200	0.08 - 0.25
		150 - 250 HB	For low cutting force	AH120	NMJ	110 - 200	0.08 - 0.14
S	Titanium alloys (Ti-6Al-4V, etc.)	-	First choice	AH120	MJ	20 - 60	0.08 - 0.2
		-	For low cutting force	AH120	NMJ	20 - 60	0.08 - 0.14
	Heat-resistant alloys (Inconel718, etc.)	-	First choice	AH120	MJ	20 - 40	0.07 - 0.18
		-	For low cutting force	AH120	NMJ	20 - 40	0.07 - 0.14

Note: See page 9 for more information about grades.
When you use the NMJ chipbreaker, please set up the feed less than 0.15 mm/t.

MEMO

TUNG-TRI
TUNGALOY

Why settle for 2 cutting edges while you can have 3 on one insert?

Tung-Tri's economical insert with 3 cutting edges and optimized geometry improves efficiency and productivity with the square shoulder milling cutter.

- **3 cutting edges** on one insert for highly economical machining:

- Optimized relief geometry on the positive insert ensures **low cutting force and minimal chattering.**

- Helical cutting edges and optimized positioning on cutter provide **high wall accuracy and surface quality.**

- Sharp yet tough rake geometry **reduces fracture** of cutting edges.

- Triangular shape of the insert improves **clamping rigidity and reliability.**

- Insert sizes in 6, 10, and 15 mm cover small to large depths of cut.

- **Irregular pitch** on the body minimizes chattering.

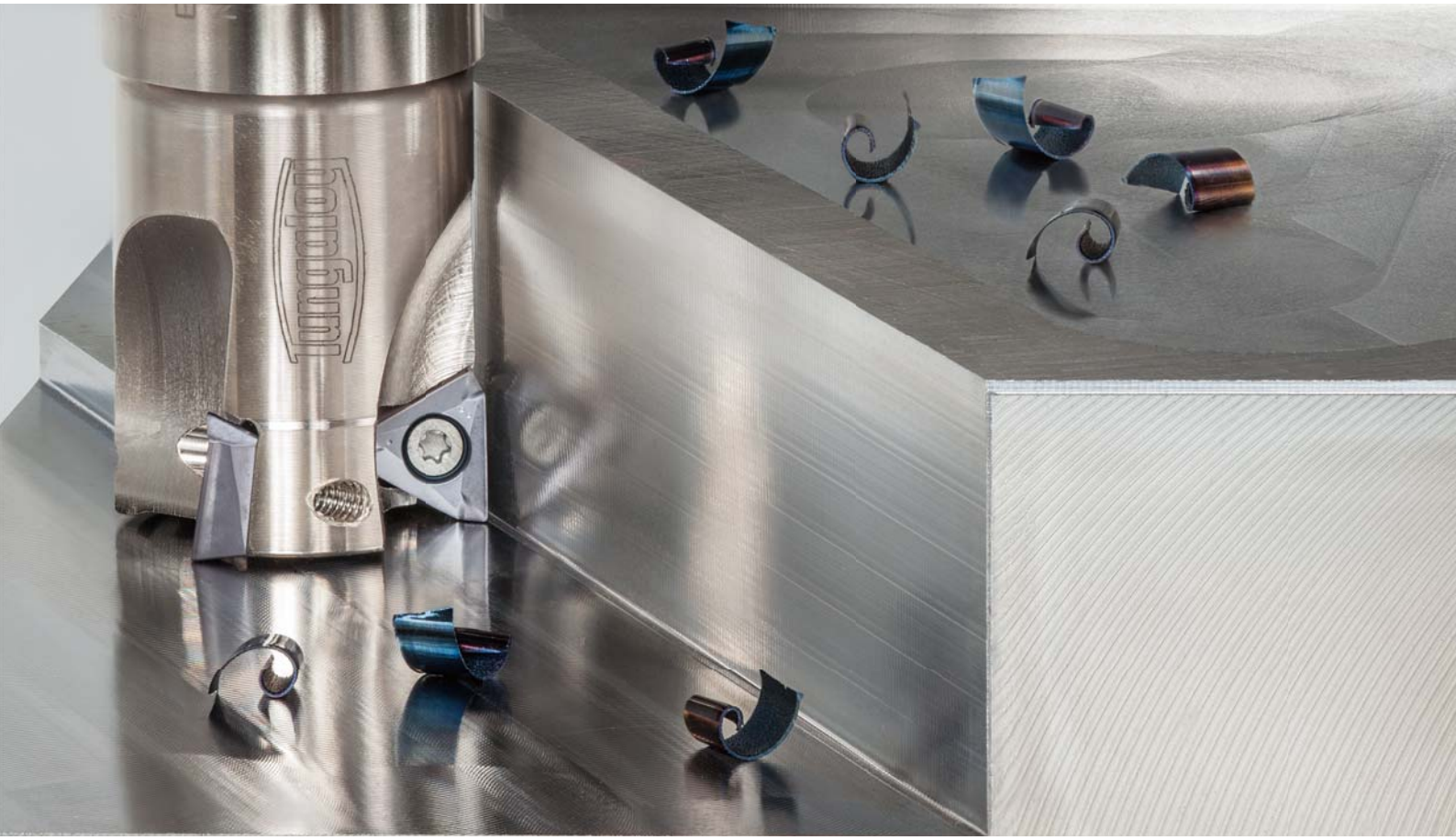

TUNGMILL FORCE
ACCELERATED MACHINING

Line up:

Inserts:
3 sizes available with versatile **MJ** chipbreaker
Corner radii: 0.2 to 2.0 mm (0.0078" to 0.078")
NMJ chipbreaker splits chips thus reducing chip volume & cutting vibration.

Cutter bodies:
Bore type **TPA**: Available in JIS, metric and inch bore sizes
Shank type **EPA**: Available in metric and inch sizes with standard and long overhang
Modular type **HPA**: Available in metric thread connection.
Roughing type **TLA**: Available in bore type & integral adaptor.

Grades:
AH3135: Perfect for steel and stainless steel
AH120: Applicable for various materials, including cast iron and superalloys.


TOMT-MJ


TOMT-NMJ

TUNG-TRI

High precision shoulder square mills with triangular inserts

CUTTER - BORE TYPE

Tung-Tri TPA

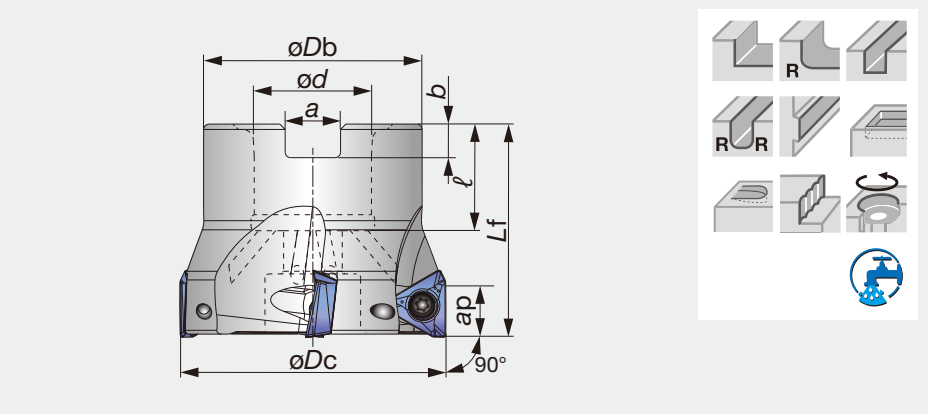

Designation	Max. ap	øDc	z	øDb	ød	ℓ	Lf	b	a	Kg	C.bolt	Insert
TPA06R032M16.0E05	6	32	5	30	16	18	40	5.6	8.4	0.14	FSHM8-30H	TOMT06...
TPA06R040M16.0E06	6	40	6	35	16	18	40	5.6	8.4	0.22	CM8x30H	TOMT06...
TPA06R050M22.0E08	6	50	8	41	22	20	40	6.3	10.4	0.31	CM10x30H	TOMT06...
TPA10R040M16.0E04	10	40	4	35	16	18	40	5.6	8.4	0.20	CM8X30H	TOMT10...
TPA10R050M22.0E04	10	50	4	41	22	20	40	6.3	10.4	0.31	CM10X30H	TOMT10...
TPA10R063M22.0E06	10	63	6	41	22	20	40	6.3	10.4	0.51	CM10X30H	TOMT10...
TPA10R080M25.4-07	10	80	7	58	25.4	26	50	6	9.5	1.04	CM12X30H	TOMT10...
TPA10R080M27.0E07	10	80	7	50	27	22	50	7	12.4	1.04	CM12X30H	TOMT10...
TPA10R100M31.7-08	10	100	8	70	31.75	32	63	8	12.7	2.02	CM16X40H	TOMT10...
TPA10R100M32.0E08	10	100	8	60	32	28.5	50	8	14.4	2.02	CM16X40H	TOMT10...
TPA15R050M22.0E04	15	50	4	41	22	20	40	6.3	10.4	0.27	FSHM10-40H	TOMT15...
TPA15R063M22.0E05	15	63	5	41	22	20	40	6.3	10.4	0.41	CM10x30H	TOMT15...
TPA15R080M25.4-06	15	80	6	46	25.4	26	50	6	9.5	0.83	CM12x30H	TOMT15...
TPA15R080M27.0E06	15	80	6	50	27	22	50	7	12.4	0.86	CM12x30H	TOMT15...
TPA15R100M31.7-07	15	100	7	60	31.75	32	50	8	12.7	1.30	TMBA-M16H	TOMT15...
TPA15R100M32.0E07	15	100	7	60	32	28.5	50	8	14.4	1.27	TMBA-M16H	TOMT15...
TPA15R125M38.1-08	15	125	8	80	38.1	38	63	10	15.9	2.70	TMBA-M20H	TOMT15...
TPA15R125M40.0E08	15	125	8	71	40	32	63	9	16.4	2.47	TMBA-M20H	TOMT15...
TPA15R160M40.0E10N	15	160	10	100	40	29	63	9	16.4	4.77	-	TOMT15...
TPA15R160M50.8-10N	15	160	10	100	50.8	46	63	11	19	4.40	-	TOMT15...

SPARE PARTS

Designation	Clamping Screw	Wrench			Mono block type wrench
		Torx Bit	Grip	Grip	
TPA06	CSTB-2.5	-	-	-	T-8D
TPA10	SR14-562/S	BLDT10/S7	SW6-SD	-	-
TPA15	TS451120I	BT20S	-	H-TB2W	-

CUTTER - SHANK TYPE

Tung-Tri EPA

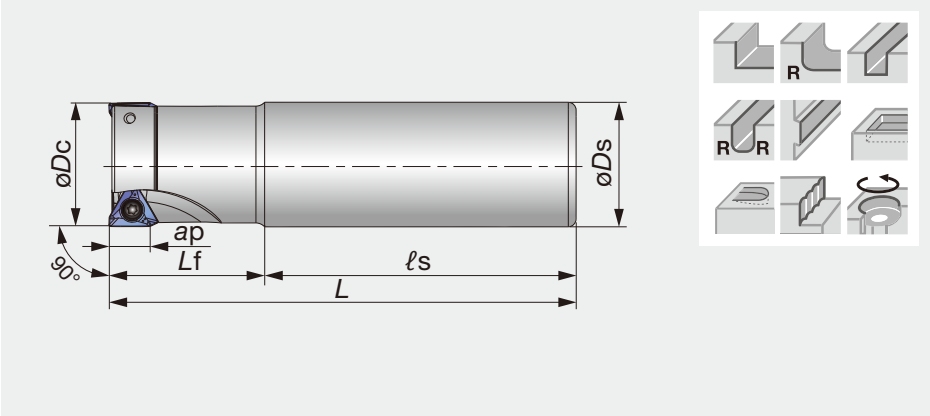

Designation	Max. *ap*	*øDc*	z	*øDs*	*ℓs*	*Lf*	*L*	Kg	Insert
EPA06R012M16.0-01N	6	12	1	16	50	18	68	0.09	TOMT06...
EPA06R016M16.0-02N	6	16	2	16	60	24	84	0.12	TOMT06...
EPA06R018M16.0-02N	6	18	2	16	60	24	84	0.13	TOMT06...
EPA06R020M16.0-02N	6	20	2	16	60	30	90	0.14	TOMT06...
EPA06R020M20.0-02N	6	20	2	20	70	30	100	0.23	TOMT06...
EPA06R020M20.0-03N	6	20	3	20	70	30	100	0.22	TOMT06...
EPA06R022M20.0-02N	6	22	2	20	70	30	100	0.23	TOMT06...
EPA06R022M20.0-03N	6	22	3	20	70	30	100	0.23	TOMT06...
EPA06R025M25.0-03N	6	25	3	25	80	35	115	0.41	TOMT06...
EPA06R025M25.0-04N	6	25	4	25	80	35	115	0.41	TOMT06...
EPA06R028M25.0-03N	6	28	3	25	80	35	115	0.42	TOMT06...
EPA06R028M25.0-04N	6	28	4	25	80	35	115	0.42	TOMT06...
EPA10R025M25.0-02N	10	25	2	25	80	35	115	0.38	TOMT10...
EPA10R028M25.0-02N	10	28	2	25	80	35	115	0.39	TOMT10...
EPA10R032M32.0-02N	10	32	2	32	80	40	120	0.66	TOMT10...
EPA10R032M32.0-03N	10	32	3	32	80	40	120	0.65	TOMT10...
EPA10R035M32.0-02N	10	35	2	32	80	40	120	0.70	TOMT10...
EPA10R035M32.0-03N	10	35	3	32	80	40	120	0.68	TOMT10...
EPA10R040M32.0-03N	10	40	3	32	80	40	120	0.72	TOMT10...
EPA10R040M32.0-04N	10	40	4	32	80	40	120	0.73	TOMT10...
EPA15R040M32.0-03N	15	40	3	32	80	40	120	0.73	TOMT15...
EPA15R050M32.0-04N	15	50	4	32	80	40	120	0.83	TOMT15...

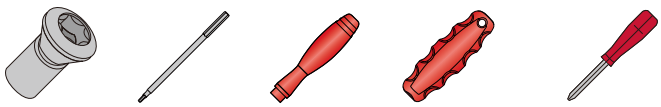

SPARE PARTS

Designation		Clamping Screw	Wrench			Mono block type wrench
			Torx Bit	Grip	Grip	
EPA06	*øDc* ≤ 18 mm	CSTB-2.5S	-	-	-	T-8D
	øDc ≥ 20 mm	CSTB-2.5	-	-	-	T-8D
EPA10		SR14-562/S	BLDT10/S7	SW6-SD	-	-
EPA15		TS45120I	BT20S	-	H-TB2W	-

CUTTER - LONG SHANK TYPE

Tung-Tri EPA

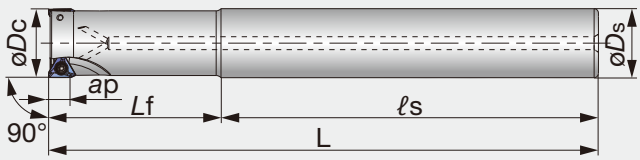

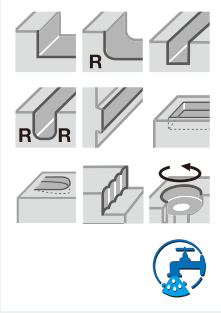

Designation	Max. ap	øDc	z	øDs	ℓs	Lf	L	Kg	Insert
EPA06R016M16.0-02L	6	16	2	16	105	40	145	0.20	TOMT06...
EPA06R018M16.0-02L	6	18	2	16	115	30	145	0.21	TOMT06...
EPA06R020M20.0-02L	6	20	2	20	135	50	185	0.41	TOMT06...
EPA06R022M20.0-02L	6	22	2	20	145	40	185	0.42	TOMT06...
EPA06R025M25.0-02L	6	25	2	25	150	70	220	0.78	TOMT06...
EPA06R028M25.0-02L	6	28	2	25	180	40	220	0.80	TOMT06...
EPA10R025M25.0-02L	10	25	2	25	150	70	220	0.75	TOMT10...
EPA10R028M25.0-02L	10	28	2	25	185	35	220	0.78	TOMT10...
EPA10R032M32.0-02L	10	32	2	32	175	80	255	1.46	TOMT10...
EPA10R035M32.0-02L	10	35	2	32	215	40	255	1.52	TOMT10...
EPA10R040M32.0-02L	10	40	2	32	205	50	255	1.57	TOMT10...
EPA15R040M32.0-02L	15	40	2	32	205	50	255	1.56	TOMT15...
EPA15R050M42.0-02L	15	50	2	42	310	50	360	3.84	TOMT15...

SPARE PARTS

Designation		Clamping Screw	Wrench			Mono block type wrench
			Torx Bit	Grip	Grip	
EPA06	øDc ≤ 18 mm	CSTB-2.5S	-	-	-	T-8D
	øDc = 20 mm	CSTB-2.5	-	-	-	T-8D
EPA10		SR14-562/S	BLDT10/S7	SW6-SD	-	-
EPA15		TS45120I	BT20S	-	H-TB2W	-

Extended flute square shoulder mills for roughing with TOMT10 triangular inserts

CUTTER - ROUGHING TYPE MAIN UNIT-BORE

Tung-Tri TLA10

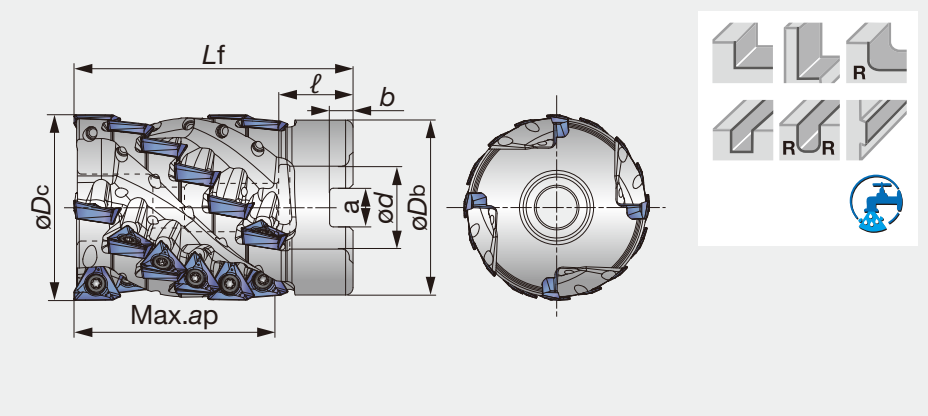

Designation	Max. ap	øDc	Z eff	øDb	ød	ℓ	Lf	b	a	Kg	z	C.bolt	Insert
TLA10R050L054M22.0E04	54	50	4	47	22	20	75	6.3	10.4	0.64	24	CAP-CM10x1.5x55-H	TOMT10…
TLA10R063L054M25.4-04	54	63	4	60	25.4	26	80	6	9.5	1.26	24	CAP-CM12x1.75x50	TOMT10…
TLA10R063L054M27.0E04	54	63	4	60	27	22	80	7	12.4	1.25	24	CAP-CM12x1.75x50	TOMT10…

SPARE PARTS

Clamping screw	Wrench
SR 14-562	T-10D

TUNG-TRI

Extended flute square shoulder mills for roughing with TOMT15 triangular inserts

CUTTER - ROUGHING TYPE MAIN UNIT-BORE

Tung-Tri TLA15-M

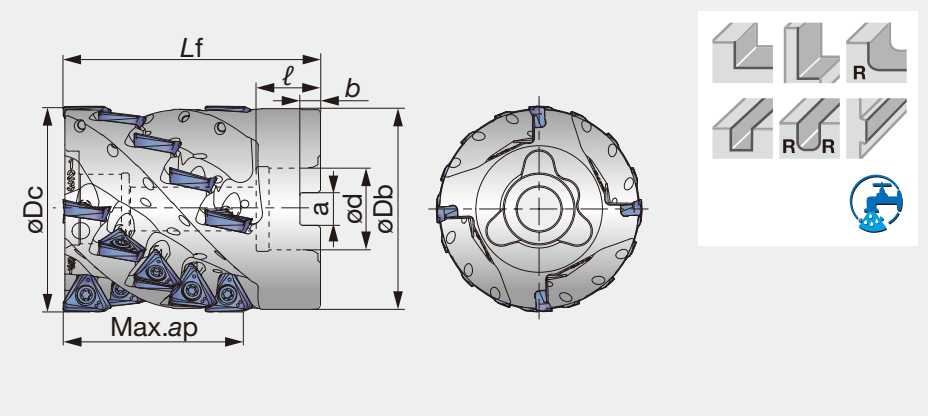

Designation	Max. ap	øDc	Z eff	øDb	ød	ℓ	Lf	b	a	Kg	z	C.bolt	Insert
TLA15R080L070M31.7-04M	70	80	4	78	31.75	25	100	8	12.7	2.29	20	CM16x75	TOMT15...
TLA15R080L070M32.0E04M	70	80	4	78	32	25	100	8	14.4	2.38	20	CM16x75	TOMT15...
TLA15R100L083M38.1-05M	83	100	5	98	38.1	38	110	10	15.9	4.24	30	CM20x80	TOMT15...
TLA15R100L083M40.0E05M	83	100	5	98	40	32	110	9	16.4	4.26	30	CM20x80	TOMT15...

SPARE PARTS

Clamping screw	Wrench	
	Torx Bit	Grip
TS45120I	BT20S	H-TB2W

Sub unit to mount on TLA15 - M type for longer Max.ap reach.

CUTTER - ROUGHING TYPE SUB UNIT

Tung-Tri TLA15-S

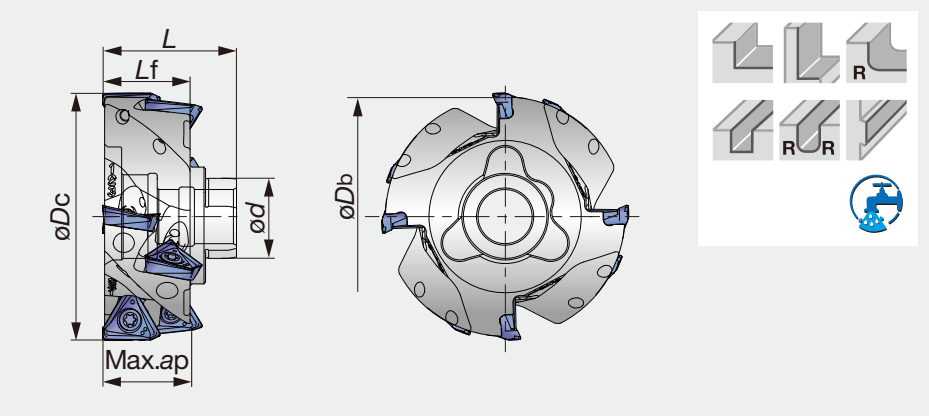

Designation	Max. ap	øDc	Z eff	øDb	ød	L	Lf	Kg	z	Insert
TLA15R080L028-04S	28	80	4	77.6	27	43	28.2	0.65	8	TOMT15...
TLA15R100L028-05S	28	100	5	97.2	33	46	28	1.05	10	TOMT15...

SPARE PARTS

Clamping screw	Wrench	
	Torx Bit	Grip
TS45120I	BT20S	H-TB2W

CENTER BOLT

*Optional parts

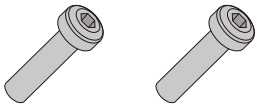

No.of sub-units	1	2
TLA15R080...	CM16x120	CM16x140
TLA15R0100...	CM20x120	CM20x150

TUNG-TRI

Extended flute square shoulder mills for roughing with TOMT15 triangular inserts.

CUTTER - ROUGHING TYPE WITH BT50 TAPER

Tung-Tri TLA15-BT

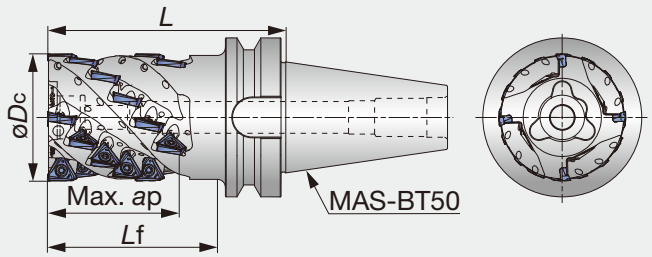

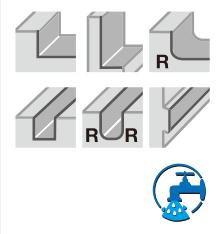

Designation	Max. ap	øDc	Z eff	L	Lf	Kg	z	C.bolt	Insert
TLA15R080L083BT50-04M	83	80	4	150	107	6.29	24	CM16x55	TOMT15...
TLA15R100L097BT50-05M	97	100	5	165	126.5	8.92	35	CM20x50	TOMT15...

SPARE PARTS

Clamping screw	Wrench	
	Torx Bit	Grip
TS45120I	BT20S	H-TB2W

High precision shoulder square endmills with TOMT06 inserts.

CUTTER - MODULAR TYPE

Tung-Tri HPA06M

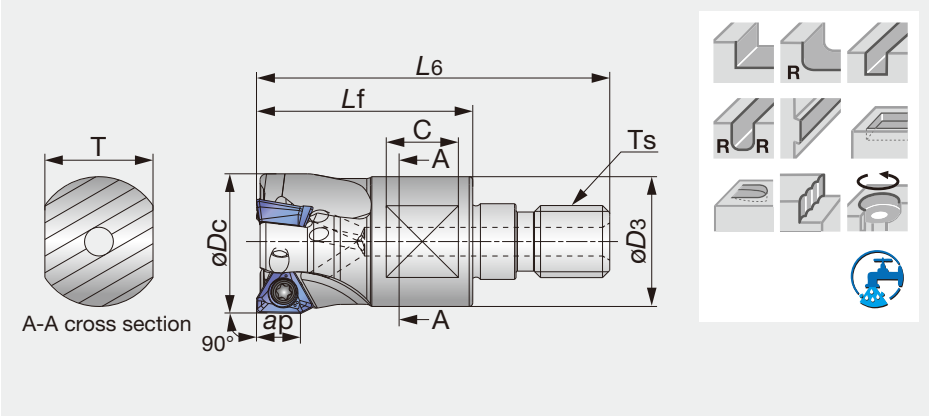

Designation	Max. *ap*	*øDc*	*L6*	*Lf*	C	T	*øD3*	Ts	Kg	z	Insert
HPA06R016MM08-02	6	16	42	25	8	10	13	M8	0.03	2	TOMT0603…
HPA06R020MM10-03	6	20	49	30	10	15	18	M10	0.06	3	TOMT0603…
HPA06R025MM12-04	6	25	57	35	10	17	21	M12	0.10	4	TOMT0603…
HPA06R032MM16-05	6	32	63	40	12	22	29	M16	0.20	5	TOMT0603…

SPARE PARTS

Designation	Clamping Screw	Mono block type wrench
HPA06R016	CSTB-2.5S	T-8D
HPA06R020	CSTB-2.5	T-8D
HPA06R025	CSTB-2.5	T-8D
HPA06R032	CSTB-2.5	T-8D

High precision shoulder square endmills withTOMT10 triangular inserts.

CUTTER - MODULAR TYPE

Tung-Tri HPA10M

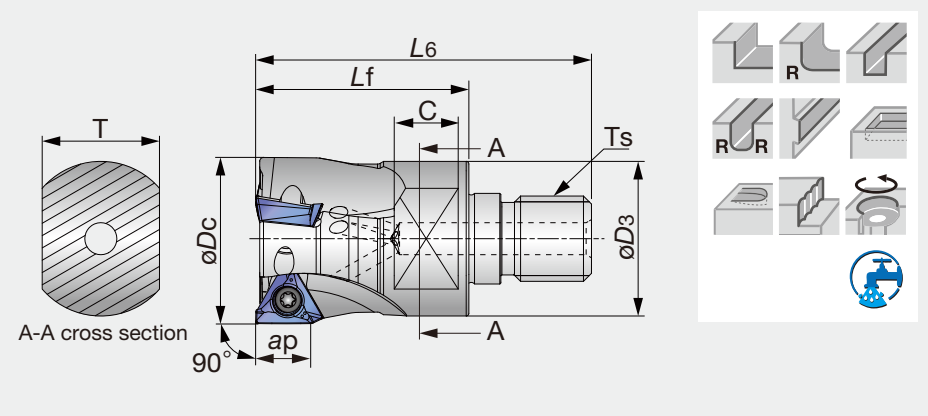

Designation	Max. *ap*	*øDc*	*L6*	*Lf*	C	T	*øD3*	Ts	Kg	z	Insert
HPA10R025MM12-02	10	25	57	35	10	17	21	M8	0.09	2	TOMT1004…
HPA10R032MM16-03	10	32	63	40	12	22	29	M10	0.18	3	TOMT1004…

SPARE PARTS

Designation	Clamping Screw	Wrench	
		Torx Bit	Grip
HPA10...	SR14-562/S	BLDT10/S7	SW6-SD

INSERTS

TOMT-MJ

TOMT-NMJ

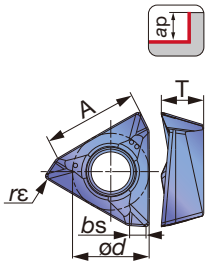

Designation	Max. ap	A	ød	T	rε	bs	AH3135				AH120			
							P	M	K	S	P	M	K	S
TOMT060302PDER-MJ	6	6.2	5.6	3.2	0.2	1.4	●	●			○		●	●
TOMT060304PDER-MJ	6	6.2	5.6	3.2	0.4	1.2	●	●			○		●	●
TOMT060308PDER-MJ	6	6.2	5.6	3.2	0.8	0.8	●	●			○		●	●
TOMT100404PDER-MJ	10	10.5	8.6	4.7	0.4	1.5	●	●			○		●	●
TOMT100408PDER-MJ	10	10.5	8.6	4.7	0.8	1.1	●	●			○		●	●
TOMT100416PDER-MJ	10	10.5	8.6	4.7	1.6	0.2	●	●			○		●	●
TOMT150604PDER-MJ	15	15.7	12.7	6	0.4	2.2	●	●			○		●	●
TOMT150608PDER-MJ	15	15.7	12.7	6	0.8	1.9	●	●			○		●	●
TOMT150616PDER-MJ	15	15.7	12.7	6	1.6	1.1	●	●			○		●	●
TOMT150620PDER-MJ	15	15.7	12.7	6	2	0.7	●	●			○		●	●
TOMT150608PDER-NMJ	15	15.7	12.7	6	0.8	1.9	●	●			○		●	●

● First choice

Note: See page 9 for more information about grades.

STANDARD CUTTING CONDITIONS

TPA/EPA/HPA

ISO	Workpiece materials	Hardness	Grades	Cutting speed: *Vc* (m/min)			Feed per tooth: *fz* (mm/t)		
				T/EPA06	T/EPA10	T/EPA15	T/EPA06	T/EPA10	T/EPA15
P	Low carbon steel (SS400 / E275A, S15C / C15E4, etc.)	- 200	AH3135	100 - 220	100 - 250	100 - 250	0.05 - 0.15	0.08 - 0.2	0.08 - 0.25
P	High carbon steel (S45C / C45, etc.)	200 - 300	AH3135	100 - 170	100 - 200	100 - 230	0.05 - 0.12	0.08 - 0.15	0.08 - 0.2
P	Alloy steel (SCM440, etc. / 42CrMo4, etc.)	200 - 300	AH3135	100 - 170	100 - 200	100 - 230	0.05 - 0.12	0.08 - 0.15	0.08 - 0.2
P	Tool steel (SKD61 / X40CrMoV5-1, etc.)	30 - 40 HRC	AH3135	100 - 120	100 -150	100 - 180	0.05 - 0.12	0.08 - 0.15	0.08 - 0.2
M	Stainless steel (SUS304 / X5CrNi18-9, etc.)	-	AH3135	80 - 150	80 - 200	90 - 200	0.05 - 0.15	0.08 - 0.2	0.08 - 0.2
K	Grey cast iron (FC250 / GG25 / 250, etc.)	150 - 250	AH120	100 - 200	100 - 250	140 - 250	0.05 - 0.15	0.08 - 0.2	0.08 - 0.25
K	Ductile cast iron (FCD450 / GGG45 / 450-10S, etc.)	150 - 250	AH120	80 - 150	80 - 200	110 - 200	0.05 - 0.15	0.08 - 0.2	0.08 - 0.25
S	Titanium alloys (Ti-6Al-4V, etc.)	-	AH120	20 - 50	20 - 60	20 - 60	0.05 - 0.1	0.08 - 0.15	0.08 - 0.18
S	Heat-resistant alloys (Inconel 718, etc.)	-	AH120	20 - 35	20 - 40	20 - 40	0.03 - 0.08	0.05 - 0.13	0.07 - 0.15

Note: See page 9 for more information about grades.
When you use the NMJ chipbreaker, please set up the feed less than 0.15 mm/t.

· Remove excessive chip accumulation with an air blast.
· For the operation with depth of cut which varies (ex.casting skin) and machining of workpiece materials with interrupted surface, the feed per tooth (*fz*) should be set to the lower recommended value shown in the above table.
· Cutting conditions maybe limited depending on machine power, workpiece rigidity, and spindle output. When the cutting width, depth, or overhang length is large, set *Vc* and *fz* to the lower recommended values and check the machine power and vibration.

TLA (Roughing type)

ISO	Workpiece materials	Hardness	Grades	Cutting speed: *Vc* (m/min)		Feed per tooth: *fz* (mm/t)	
				TLA10	TLA15	TLA10	TLA15
P	Low carbon steel (SS400 / E275A, S15C / C15E4, etc.)	- 200	AH3135	100 - 220	100 - 250	100 - 250	0.05 - 0.15
P	High carbon steel (S45C / C45, etc.)	200 - 300	AH3135	100 - 170	100 - 200	100 - 230	0.05 - 0.12
P	Alloy steel (SCM440, etc. / 42CrMo4, etc.)	200 - 300	AH3135	100 - 170	100 - 200	100 - 230	0.05 - 0.12
M	Stainless steel (SUS304 / X5CrNi18-9, etc.)	-	AH3135	80 - 150	80 - 200	90 - 200	0.05 - 0.15
K	Grey cast iron (FC250 / GG25 / 250, etc.)	150 - 250	AH120	100 - 200	100 - 250	140 - 250	0.05 - 0.15
K	Ductile cast iron (FCD450 / GGG45 / 450-10S, etc.)	150 - 250	AH120	80 - 150	80 - 200	110 - 200	0.05 - 0.15
S	Titanium alloys (Ti-6Al-4V, etc.)	-	AH120	20 - 50	20 - 60	20 - 60	0.05 - 0.1
S	Heat-resistant alloys (Inconel 718, etc.)	-	AH120	20 - 35	20 - 40	20 - 40	0.03 - 0.08

Note: See page 9 for more information about grades.
When you use the NMJ chipbreaker, please set up the feed less than 0.15 mm/t.

MACHINING APPLICATIONS

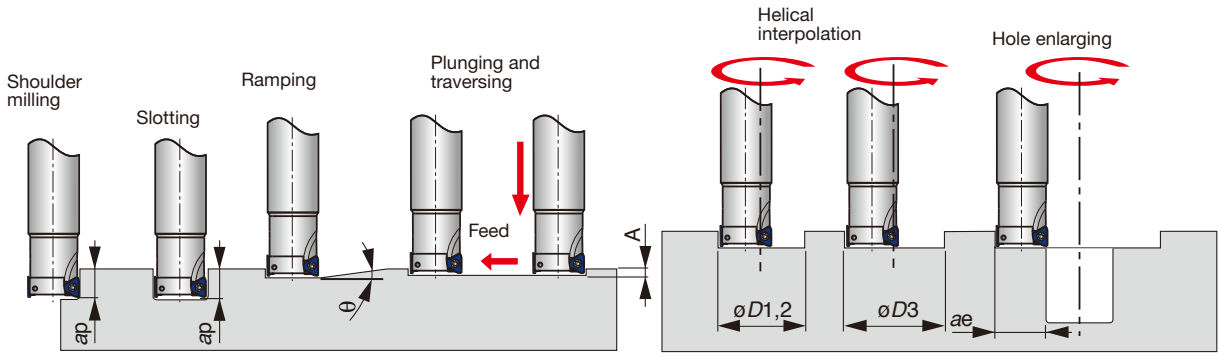

Designation	øDc	Max. depth of cut ap	Max. ramping angle θ	Max. plunging A	Min. machining øD1	Max. machining øD2	Max. machining øD3*	Max. machining r_ε	Max. cutting width in enlarging ae
EPA06R012…	12	6	5°	0.6	18	23.6	21	0.4	11.5
EPA06R016…	16	6	4.3°	0.6	25	31.6	29	0.4	15.5
EPA06R018…	18	6	3.5°	0.6	29.5	35.6	33	0.4	17.5
EPA06R020…	20	6	2.8°	0.6	33.5	39.6	37	0.4	19.5
EPA06R022…	22	6	2.5°	0.6	37.5	43.6	41	0.4	21.5
EPA06R025…	25	6	2°	0.6	43.5	49.6	47	0.4	24.5
EPA06R028…	28	6	1.8°	0.6	49.5	55.6	53	0.4	27.5
TPA06R032…	32	6	1.5°	0.6	57.5	63.6	61	0.4	31.5
TPA06R040…	40	6	1°	0.6	73.5	79.6	77	0.4	39.5
TPA06R050…	50	6	0.7°	0.6	94	99.6	97	0.4	49.5
EPA10R025…	25	10	2°	0.6	42.1	49.6	47	0.4	24.5
EPA10R028…	28	10	2°	0.6	48.1	55.6	53	0.4	27.5
EPA10R032…	32	10	2°	0.6	56.1	63.6	61	0.4	31.5
EPA10R035…	35	10	1.7°	0.6	62.1	69.6	67	0.4	34.5
E/TPA10R040…	40	10	1.4°	0.6	72.1	79.6	77	0.4	39.5
TPA10R050…	50	10	0.9°	0.6	92.1	99.6	97	0.4	49.5
TPA10R063…	63	10	0.8°	0.6	118.1	125.6	123	0.4	62.5
TPA10R080…	80	10	0.6°	0.6	152.1	159.6	157	0.4	79.5
TPA10R100…	100	10	0.5°	0.6	192.1	199.6	197	0.4	99.5
EPA15R040…	40	15	2.3°	0.8	68.5	79.2	75.5	0.8	39
E/TPA15R050…	50	15	1.7°	0.8	88.5	99.2	95.5	0.8	49
TPA15R063…	63	15	1.4°	0.8	114.5	125.2	121.5	0.8	62
TPA15R080…	80	15	1°	0.8	148.5	159.2	155.5	0.8	79
TPA15R100…	100	15	0.8°	0.8	188.5	199.2	195.5	0.8	99
TPA15R125…	125	15	0.6°	0.8	238.5	249.2	245.5	0.8	124
TPA15R160…	160	15	0.5°	0.8	308.5	319.2	315.5	0.8	159

*Flat bottom hole

TUNGTRI SHRED
TUNGALOY

Long-edge rough milling with small chips effectively prevents chatter

TungTri-Shred combines the popular Tung-Tri insert with the chip splitting technology for rough machining with long overhang.

- **Optimized cutter design and cutting edge geometry**:

- All 3 cutting edges are identical, simplifying mounting procedure in each pocket

- The insert's triangular shape ensures **stable and rigid clamping**.

- Insert positions in irregular pitch help achieve **good surface finish**.

- 2 types of the inserts can be used in the same pocket:

- **3 cutting edges** with wavy chip splitter on the insert break chips and reduce machining load.

- **Straight cutting edge** provides high wall accuracy and surface quality.

TUNGFORCE MILL
ACCELERATED MACHINING

Line up:

Inserts available in 2 geometries: **NMJ** with chip splitter and **MJ** with straight cutting edge with depth capability of 16 mm (0.63"):
TCMT….NMJ: Work well in long-overhang applications and machining with extended flute cutter
TCGT…MJ: Excellent surface finish and accuracy due to its high-precision straight cutting edge

Cutter bodies:
Long edge type **LPTC**: Available in metric and inch bore sizes
Shank type **EPTC**: Available in metric and inch sizes
Bore type **TPTC**: Available in metric, JIS, and inch bore sizes

Grades:
The newest **AH3135** and the popular **AH120** suitable for machining all materials


TCGT-MJ


TCMT-NMJ

CUTTER - ROUGHING TYPE - BORE

TungTri-Shred LPTC16

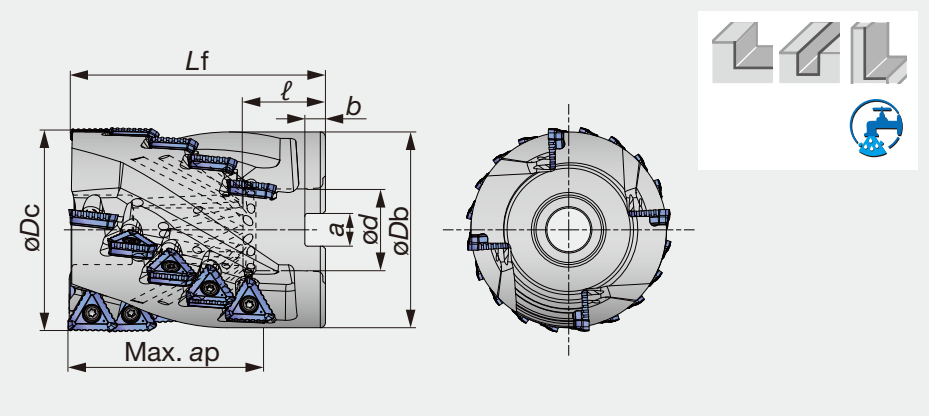

Designation	Max. ap	øDc	Z eff	z	øDb	Lf	ød	ℓ	a	b	Kg	C.bolt	Insert
LPTC16J063B25.4L061R03	61.0	63.00	3	12	59	85.0	25.400	26.00	9.50	6.00	1.25	CAP-CM12X1.75X50	TC*T16
LPTC16M063B27.0L061R03	61.0	63.00	3	12	59	85.0	27.000	22.00	12.40	7.00	1.24	CAP-CM12X1.75X50	TC*T16
LPTC16J080B31.7L076R04	76.0	80.00	4	20	76	100.0	31.750	32.00	12.70	8.00	2.44	CM16X75	TC*T16
LPTC16M080B32.0L076R04	76.0	80.00	4	20	76	100.0	32.000	25.00	14.40	8.00	2.46	CM16X75	TC*T16

SPARE PARTS

Clamping screw	Wrench	
	Torx Bit	Grip
TS 40B100I	BT15S	H-TB2W

CUTTER - BORE TYPE

TungTri-Shred TPTC16

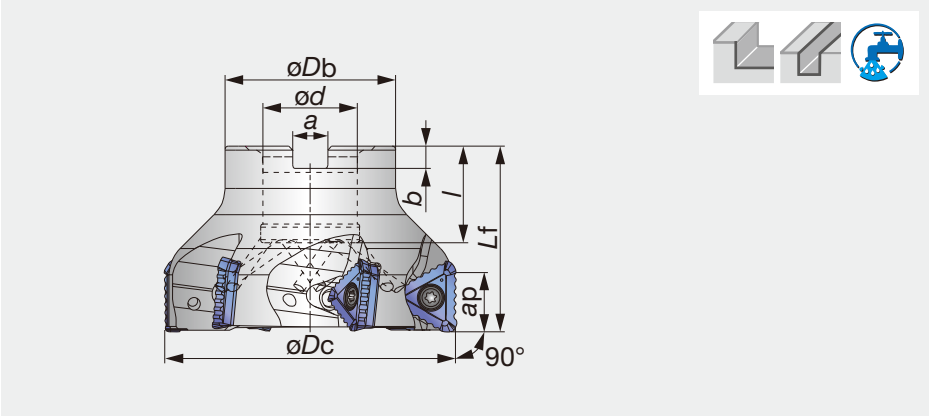

Designation	Max. ap	øDc	z	øDb	Lf	ød	ℓ	a	b	Kg	C.bolt	Insert
TPTC16M050B22.0R04	16.0	50.00	4	41	40.0	22.000	20.00	10.40	6.30	0.29	FSHM10-40H	TC*T16
TPTC16M063B22.0R05	16.0	63.00	5	41	40.0	22.000	20.00	10.40	6.30	0.44	CM10X30H	TC*T16
TPTC16J080B25.4R06	16.0	80.00	6	46	50.0	25.400	26.00	9.50	6.00	0.88	CM12X30H	TC*T16
TPTC16M080B27.0R06	16.0	80.00	6	50	50.0	27.000	22.00	12.40	7.00	0.90	CM12X30H	TC*T16
TPTC16J100B31.7R07	16.0	100.00	7	60	50.0	31.750	26.00	9.50	6.00	1.38	TMBA-M16H	TC*T16
TPTC16M100B32.0R07	16.0	100.00	7	60	50.0	32.000	28.50	14.40	8.00	1.35	TMBA-M16H	TC*T16

SPARE PARTS

Clamping screw	Wrench	
	Torx Bit	Grip
TS 40B100I	BT15S	H-TB2W

CUTTER - SHANK TYPE

TungTri-Shred EPTC16

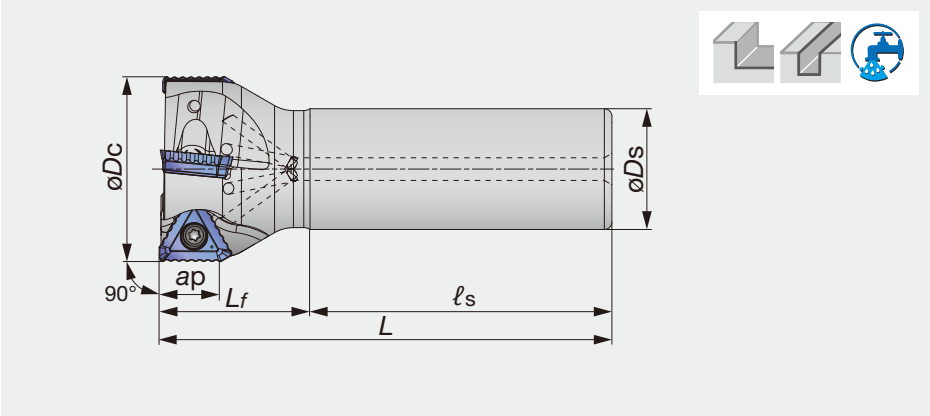

Designation	Max. ap	øDc	z	øDs	ℓs	Lf	L	Kg	Insert
EPTC16M050C32.0R04	16.0	50.00	4	32.0	80.0	40.0	120.0	0.80	TC*T16
EPTC16M050C42.0R02L	16.0	50.00	2	42.0	310.0	50.0	360.0	3.80	TC*T16

SPARE PARTS

Clamping screw	Wrench	
	Torx Bit	Grip
TS 40B100I	BT15S	H-TB2W

INSERTS

TCGT-MJ

TCMT-NMJ

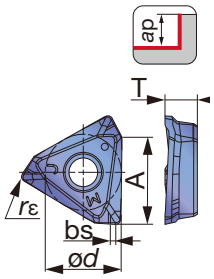

Designation	Max. ap	A	ød	T	rε	bs	AH3135				AH120			
TCGT160608PDER-MJ	16	16	13.7	5.8	0.8	1	●	●			○		●	●
TCMT160620PDER-NMJ	16	16	13.3	5.8	2	2	●	●			○		●	●
							P	M	K	S	P	M	K	S

● First choice
Note: See page 9 for more information about grades.

STANDARD CUTTING CONDITIONS

ISO	Workpiece materials	Hardness	Priority	Grades	Chip-breaker	Cutting speed Vc (m/min)	Feed per tooth fz (mm/t)
P	Low carbon steel (C15, C20, etc.)	- 300 HB	First choice	AH3135	NMJ*	100 - 250	0.08 - 0.15
		- 300 HB	For finishing	AH3135	MJ	100 - 250	0.08 - 0.2
	Carbon steel and alloy steel (S55C / C55, SCM440 / 42CrMo4, etc.)	- 300 HB	First choice	AH3135	NMJ*	100 - 230	0.08 - 015
		- 300 HB	For finishing	AH3135	MJ	100 - 230	0.08 - 0.2
	Prehardened steel (NAK80, PX5, etc.)	30 - 40 HRC	First choice	AH3135	NMJ*	100 - 180	0.08 - 0.15
		30 - 40 HRC	For finishing	AH3135	MJ	100 - 180	0.08 - 0.2
M	Stainless steel (SUS304 / X5CrNi18-9, SUS316 / X5CrNiMo17-12-3, etc.)	-	First choice	AH3135	NMJ*	90 - 200	0.08 - 0.15
		-	For finishing	AH3135	MJ	90 - 200	0.08 - 0.2
K	Grey cast iron (FC250 / 250, FC300 / 300, etc.)	150 - 250 HB	First choice	AH120	NMJ*	140 - 250	0.08 - 0.15
		150 - 250 HB	For finishing	AH120	MJ	140 - 250	0.08 - 0.25
	Ductile cast iron (400-15, FCD600 / 600-3, etc.)	150 - 250 HB	First choice	AH120	NMJ*	140 - 250	0.08 - 0.15
		150 - 250 HB	For finishing	AH120	MJ	140 - 250	0.08 - 0.25
S	Titanium alloys (Ti-6Al-4V, etc.)	-	First choice	AH120	NMJ*	20 - 60	0.08 - 0.15
		-	For finishing	AH120	MJ	20 - 60	0.08 - 0.18
	Heat-resistant alloys (Inconel718, etc.)	-	First choice	AH120	NMJ*	20 - 40	0.08 - 0.13
		-	For finishing	AH120	MJ	20 - 40	0.08 - 0.15

* When you use the NMJ chipbreaker, please set up the feed less than 0.15 mm/t.

TungForce-Rec
TUNGALOY

Miniature shoulder milling cutter with incomparable stability

TungForce-Rec, a new miniature shoulder milling series, features a unique clamping system offering exceptional stability in machining small pockets and slots.

- **Reliability for stable machining.**

- Optimized insert positioning provides **core strength** to the cutter body in small diameters.

- Obtuse-angled flank surface of the insert **toughens cutting edge**, avoiding chipping.

- **Insert strength** is increased at the cross section across the screw hole.

- Large screw and its increased contact area with the body **improve stability**.

- V-shaped insert bottom broadens clamping area for the given size of the insert.

- Sharp cutting edge with positive rake face ensures **smooth cutting**.

TUNGFORCE MILL
ACCELERATED MACHINING

Line up:

AVGT... insert with 2 cutting edges for depth of cut up to 6 mm (0.23"):
MJ chipbreaker: Suitable for materials, such as steel, stainless steel, cast iron, and superalloys
AJ chipbreaker: Suitable for non-ferrous metal due to its polished rake face
Corner radii: 0.2, 0.4, and 0.8 mm (0.0078", 0.0157", and 0.031")

Cutter bodies:
Shank type **EPAV**: Available in metric and inch sizes
Modular type **HPAV**: Available in metric threads and TungMeister threads, offering flexibility to the users of either metric shank or TungMeister shank

Grades:
AH3135: The most suitable for steel, stainless steel, and high-temperature alloys
AH120: The first choice for cast iron and even titanium
Uncoated **KS05F**: Suitable for non-ferrous metal due to polished rake face

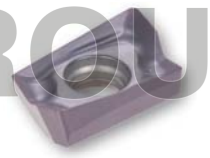
AVGT-MJ


AVGT-AJ

CUTTER - SHANK TYPE

TungForce-Rec EPAV

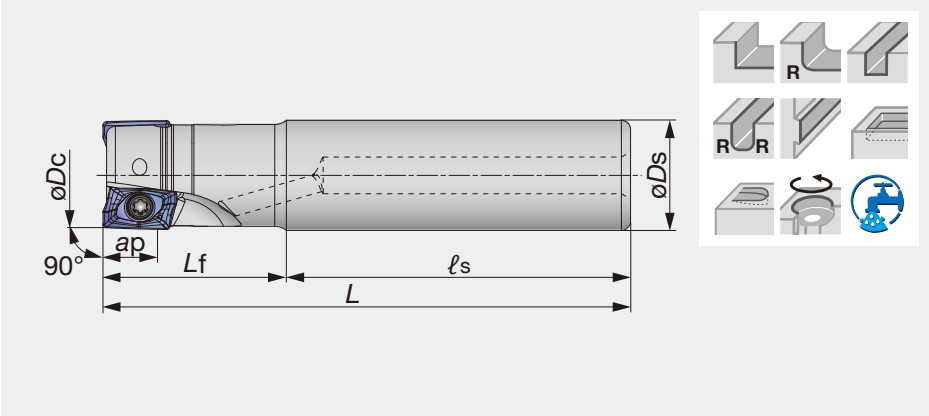

Designation	Max. ap	øDc	z	øDs	ls	Lf	L	Kg	Insert
EPAV06M008C10.0R01	6	8.00	1	10.0	60.0	20.0	80.0	0.04	AVGT06**
EPAV06M010C10.0R02	6	10.00	2	10.0	60.0	20.0	80.0	0.04	AVGT06**
EPAV06M010C10.0R02L	6	10.00	2	10.0	65.0	35.0	100.0	0.06	AVGT06**
EPAV06M012C12.0R02	6	12.00	2	12.0	60.0	20.0	80.0	0.06	AVGT06**
EPAV06M012C12.0R03	6	12.00	3	12.0	60.0	20.0	80.0	0.06	AVGT06**
EPAV06M012C12.0R02L	6	12.00	2	12.0	85.0	35.0	120.0	0.09	AVGT06**
EPAV06M016C16.0R03	6	16.00	3	16.0	70.0	20.0	90.0	0.12	AVGT06**
EPAV06M016C16.0R04	6	16.00	4	16.0	70.0	20.0	90.0	0.12	AVGT06**
EPAV06M016C16.0R03L	6	16.00	3	16.0	105.0	35.0	140.0	0.20	AVGT06**

SPARE PARTS

Clamping screw	Mono block type wrench
CSPB-2H	IP-6DB

CUTTER - MODULAR TYPE - METRIC THREAD

TungForce-Rec HPAV-M

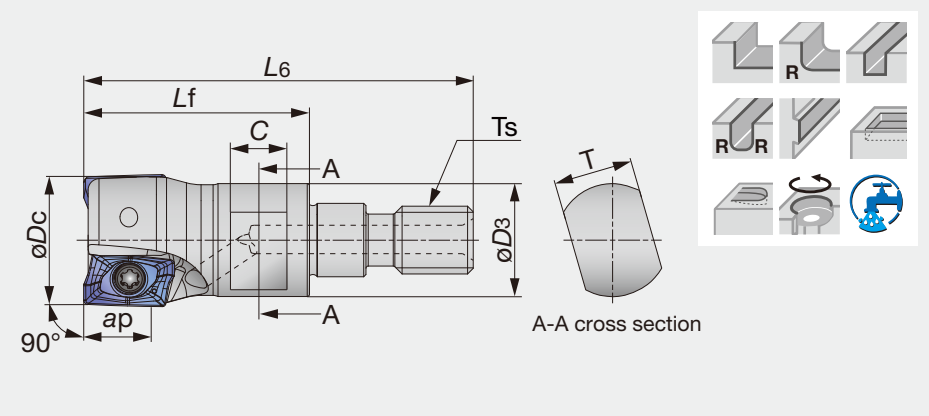

Designation	Max. ap	øDc	z	L6	Lf	C	T	øD3	Ts	Kg	Insert
HPAV06M010M06R02	6	10.00	2	34.5	20.0	5.0	7.0	9.5	M6	0.01	AVGT06**
HPAV06M012M06R02	6	12.00	2	34.5	20.0	5.0	7.0	10.0	M6	0.01	AVGT06**
HPAV06M012M06R03	6	12.00	3	34.5	20.0	5.0	7.0	10.0	M6	0.01	AVGT06**
HPAV06M016M08R03	6	16.00	3	42.0	25.0	8.0	10.0	13.0	M8	0.03	AVGT06**
HPAV06M016M08R04	6	16.00	4	42.0	25.0	8.0	10.0	13.0	M8	0.03	AVGT06**

SPARE PARTS

Clamping screw	Mono block type wrench
CSPB-2H	IP-6DB

CUTTER - MODULAR HEAD - TUNGMEISTER THREAD

TungForce-Rec HPAV06-S

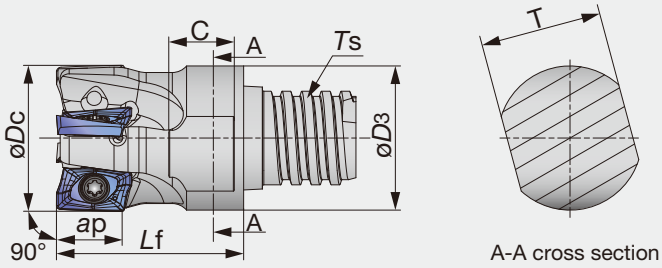

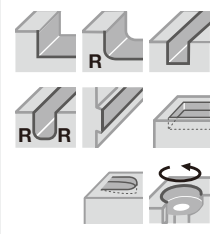

Designation	Max. ap	øDc	z	Lf	C	T	øD3	Ts	Kg	Insert
HPAV06M010S06R02	6	10	2	16	5	8	9.8	S06	0.01	AVGT06**
HPAV06M012S08R02	6	12	2	18	5	10	11.7	S08	0.02	AVGT06**
HPAV06M012S08R03	6	12	3	18	5	10	11.7	S08	0.02	AVGT06**
HPAV06M016S10R03	6	16	3	20	7	13	15.4	S10	0.03	AVGT06**
HPAV06M016S10R04	6	16	4	20	7	13	15.4	S10	0.03	AVGT06**

SPARE PARTS

Clamping screw	Mono block type wrench
CSPB-2H	IP-6DB

INSERTS

AVGT-MJ

AVGT-AJ

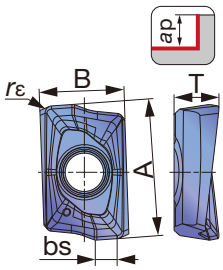

Designation	Max. ap	A	B	T	rε	bs	AH3135				AH120				KS05F
AVGT060302PBER-MJ	6	8	5	2.7	0.2	1.5	●	●			○	●	●	●	
AVGT060304PBER-MJ	6	8	5	2.7	0.4	1.3	●	●			○	●	●	●	
AVGT060308PBER-MJ	6	8	5	2.6	0.8	0.9	●	●			○	●	●	●	
AVGT060302PBFR-AJ	6	8	5	2.7	0.2	1.5									●
AVGT060304PBFR-AJ	6	8	5	2.7	0.4	1.3									●
AVGT060308PBFR-AJ	6	8	5	2.6	0.8	0.9									●
							P	M	S	H	P	K	S	H	N

● First choice
Note: See page 9 for more information about grades.

STANDARD CUTTING CONDITIONS

ISO	Workpiece materials	Hardness	Priority	Grades	Chip-breaker	Cutting speed Vc (m/min)	Feed per tooth fz (mm/t)
P	Low carbon steel (S15C / C15E4, SS400 / E275A, etc.)	- 300 HB	First choice	AH3135	MJ	230 - 430	0.07 - 0.12
	Carbon steel and alloy steel (S55C / C55, SCM440 / 42CrMo4, etc.)	- 300 HB	First choice	AH3135	MJ	150 - 350	0.07 - 0.12
	Prehardened steel (NAK80, PX5, etc.)	30 - 40 HRC	First choice	AH120	MJ	100 - 230	0.07 - 0.12
M	Stainless steel (SUS304 / X5CrNi18-9, SUS316 / X5CrNiMo17-12-3, etc.)	-	First choice	AH3135	MJ	150 - 220	0.06 - 0.1
K	Grey cast iron (FC250 / 250, FC300 / 300, etc.)	150 - 250 HB	First choice	AH120	MJ	200 - 330	0.07 - 0.12
	Ductile cast iron (FC400, FCD600 / 600-3, etc.)	150 - 250 HB	First choice	AH120	MJ	150 - 240	0.07 - 0.12
N	Aluminium alloys (Si < 13%)	-	First choice	KS05F	AJ	650 - 1000	0.07 - 0.12
S	Titanium alloys (Ti-6Al-4V, etc.)	-	First choice	AH120	MJ	70 - 90	0.06 - 0.10
	Superalloys (Inconel718, etc.)	-	First choice	AH120	MJ	45 - 65	0.06 - 0.09
H	Hardened steel (SKD61 / X40CrMoV5-1, etc.)	40 - 50 HRC	First choice	AH120	MJ	45 - 70	0.05 - 0.08
	Hardened steel (SKD11 / X153CrMoV12, etc.)	50 - 60 HRC	First choice	AH120	MJ	40 - 65	0.04 - 0.06

Note: See page 9 for more information about grades.

MACHINING APPLICATIONS

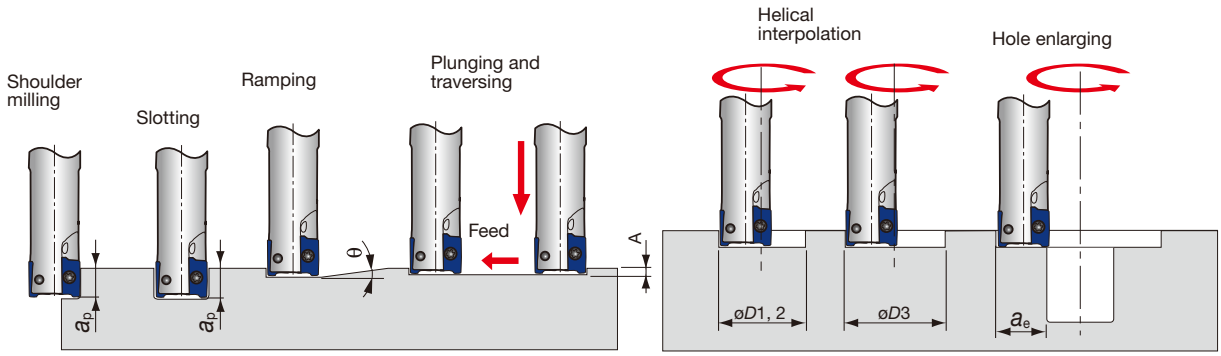

Designation	øDc	Max. depth of cut ap	Max. ramping angle θ	Max. plunging A	Min. machining øD1	Max. machining øD2	Max. machining øD3*	Max. cutting width in enlarging ae
EPAV06_008…	8	6	-	-	-	-	-	-
EPAV/HPAV06_010…	10	6	3°	0.3	15	19	18	9.5
EPAV/HPAV06_012…	12	6	3°	0.5	18	23	22	11.5
EPAV/HPAV06_016…	16	6	2.5°	0.6	25	31	30	15.5

*Flat bottom hole

MEMO

TUNGSLOT
TUNGALOY

Stable slot milling operation with excellent chip control!

TungSlot is an economical and well-designed slot milling line for improved surface finish in slotting, face milling, and back-face milling.

- **Economical 6-cornered insert reduces tooling cost.**

- **Groove width ranges from 4 to 25 mm (0.157” - 0.984”).**

- **Optimized insert geometry:**

- **TungThinSlit**
The cutting edge geometry forms compact chip shape in the width smaller than the groove width, helping chips evacuate.
Excellent chip evacuation improves surface finish of the machined groove and also reduces time to clean clogged chips.

- **TungUniversalSlot**
The triangular shape creates large area to consistently curl chips.
Chips curl smoothly, which reduces cutting force in deep slotting.
Insert has a large wiper edge, which improves the surface roughness of slots.

- **TecTangentialSlot**
Tangentially mounted 4 cornered insert withstands high cutting force in machining wide slots.
Large wiper land not only improves surface finish but also allows plunging operation in the axial direction.

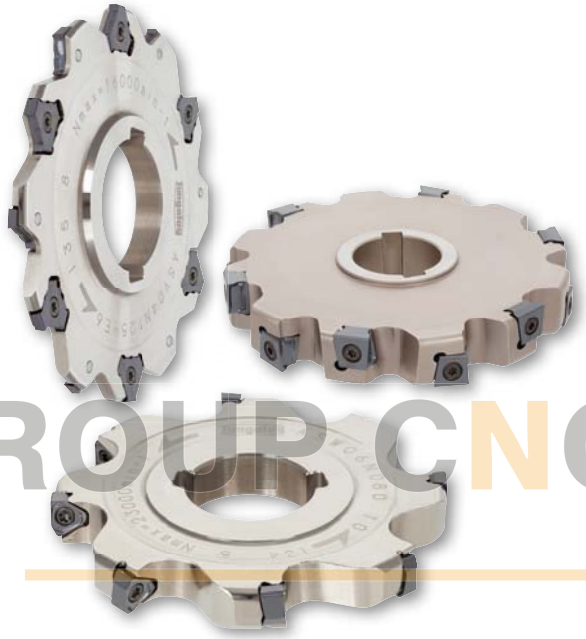

TUNGFORCE MILL
ACCELERATED MACHINING

Line up:

Inserts:

TVKX
Groove width: 4 to 9 mm (0.157” to 0.354”)
Std. corner radius: 0.2, 0.4, 0.8 mm (0.0078”, 0.015”, 0.031”)
Corner radius in special sizes will be available upon request.

WNGU
Groove width: 9 to 16 mm (0.354” to 0.63”)
Std. corner radius: 0.8, 1.6 mm (0.031”, 0.063”)
Corner radius in special sizes will be available upon request.

LMEU
Groove width: 16 to 25 mm (0.63” to 0.98”)
Std. corner radius: 0.8, 1.6, 2.4, 3.2 mm (0.031”, 0.063”, 0.094”, 0.125”)
Corner radius in special sizes will be available upon request.

Cutter bodies:
ASV (axial drive) type: Groove width 4 to 9 mm (0.157” to 0.354”)
ASW (axial drive)/**TSW** (radial drive) type: Groove width 9 to 16 mm (0.354” to 0.63”)
ASN (axial drive)/**TSN** (radial drive) type: Groove width 16 to 25 mm (0.63” to 0.98”)
Special tools designed for specific applications will be available upon request.


TVKX-MJ

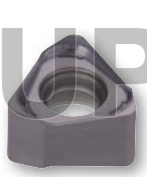
WNGU-MJ


LMEU-MJ

Axial drive type slot milling cutter with face mounted inserts

CUTTER - AXIAL DRIVE

TungThinSlit ASV + TVKX

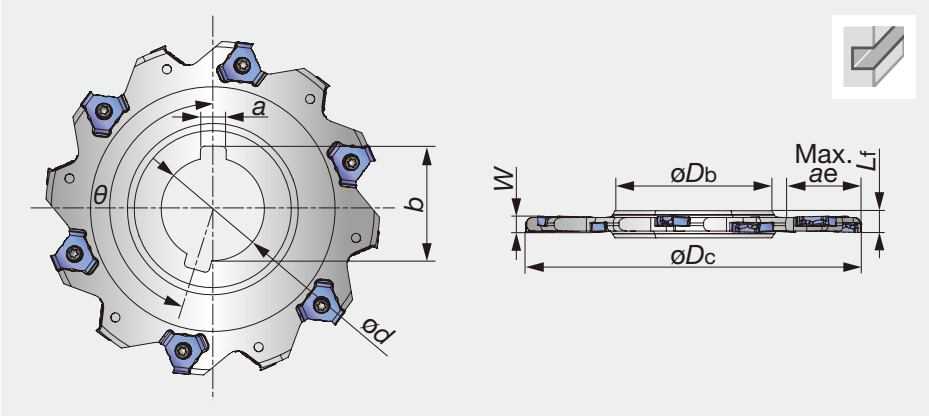

Designation	W	øDc	Z eff	øDb	ød	Lf	b	a	Max. ae	θ	z	Insert
ASV02N080-4	4	80	5	41	25.4	6	28	6.35	15	162°	10	TVKX0202**
ASV02N080-E4	4	80	5	41	27	6	29.8	7	15	162°	10	TVKX0202**
ASV02N100-4	4	100	6	48	31.75	6	35.2	7.92	20	165°	12	TVKX0202**
ASV02N100-E4	4	100	6	47	32	6	34.8	8	20	165°	12	TVKX0202**
ASV02N125-4	4	125	8	58	38.1	6	42.3	9.52	30	168.75°	16	TVKX0202**
ASV02N125-E4	4	125	8	55	40	6	43.5	10	30	168.75°	16	TVKX0202**
ASV02N160-4	4	160	10	58	38.1	6	42.3	9.52	45	171°	20	TVKX0202**
ASV02N160-E4	4	160	10	55	40	6	43.5	10	45	171°	20	TVKX0202**
ASV03N080-5	5	80	5	41	25.4	6.5	28	6.35	15	162°	10	TVKX03X3**
ASV03N080-E5	5	80	5	41	27	6.5	29.8	7	15	162°	10	TVKX03X3**
ASV03N100-5	5	100	6	48	31.75	6.5	35.2	7.92	20	165°	12	TVKX03X3**
ASV03N100-E5	5	100	6	47	32	6.5	34.8	8	20	165°	12	TVKX03X3**
ASV03N125-5	5	125	8	58	38.1	6.5	42.3	9.52	30	168.75°	16	TVKX03X3**
ASV03N125-E5	5	125	8	55	40	6.5	43.5	10	30	168.75°	16	TVKX03X3**
ASV03N160-5	5	160	10	58	38.1	6.5	42.3	9.52	45	171°	20	TVKX03X3**
ASV03N160-E5	5	160	10	55	40	6.5	43.5	10	45	171°	20	TVKX03X3**
ASV04N080-6	6	80	4	41	25.4	8	28	6.35	17	157.5°	8	TVKX04H3**
ASV04N080-E6	6	80	4	41	27	8	29.8	7	17	157.5°	8	TVKX04H3**
ASV04N100-6	6	100	5	48	31.75	8	35.2	7.92	23.5	162°	10	TVKX04H3**
ASV04N100-E6	6	100	5	47	32	8	34.8	8	23.5	162°	10	TVKX04H3**
ASV04N125-6	6	125	6	58	38.1	8	42.3	9.52	31	165°	12	TVKX04H3**
ASV04N125-E6	6	125	6	55	40	8	43.5	10	32.5	165°	12	TVKX04H3**
ASV04N160-6	6	160	8	58	38.1	8	42.3	9.52	48.5	168.75°	16	TVKX04H3**
ASV04N160-E6	6	160	8	55	40	8	43.5	10	50	168.75°	16	TVKX04H3**
ASV04N200-6	6	200	10	69	50.8	8	55.8	12.7	63	171°	20	TVKX04H3**
ASV04N200-E6	6	200	10	69	50	8	53.5	12	63	171°	20	TVKX04H3**
ASV05N080-8	8	80	4	41	25.4	10	28	6.35	17	157.5°	8	TVKX0504**
ASV05N080-E8	8	80	4	41	27	10	29.8	7	17	157.5°	8	TVKX0504**

Designation	*W*	*øDc*	Z eff	*øDb*	*ød*	*Lf*	*b*	*a*	Max. *ae*	*θ*	z	Insert
ASV05N100-8	8	100	5	48	31.75	10	35.2	7.92	23.5	162°	10	TVKX0504**
ASV05N100-E8	8	100	5	47	32	10	34.8	8	23.5	162°	10	TVKX0504**
ASV05N125-8	8	125	6	58	38.1	10	42.3	9.52	31	165°	12	TVKX0504**
ASV05N125-E8	8	125	6	55	40	10	43.5	10	32.5	165°	12	TVKX0504**
ASV05N160-8	8	160	8	58	38.1	10	42.3	9.52	48.5	168.75°	16	TVKX0504**
ASV05N160-E8	8	160	8	55	40	10	43.5	10	50	168.75°	16	TVKX0504**
ASV05N200-8	8	200	10	69	50.8	10	55.8	12.7	63	171°	20	TVKX0504**
ASV05N200-E8	8	200	10	69	50	10	53.5	12	63	171°	20	TVKX0504**

SPARE PARTS

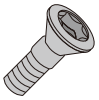


Designation	Clamping screw	Wrench		
		Mono block type	Bit	Grip
ASV02N…	SR114-018-L3.40	T-6D	-	-
ASV03N…	SR114-018-L3.40	T-6D	-	-
ASV04N…	SR14-500/L5.1	-	BT15S	H-TBS
ASV05N…	SR14-500-L7.0	-	BT15S	H-TBS

Axial drive type slot milling cutter

CUTTER - AXIAL DRIVE

TungUniversalSlot ASW + WNGU

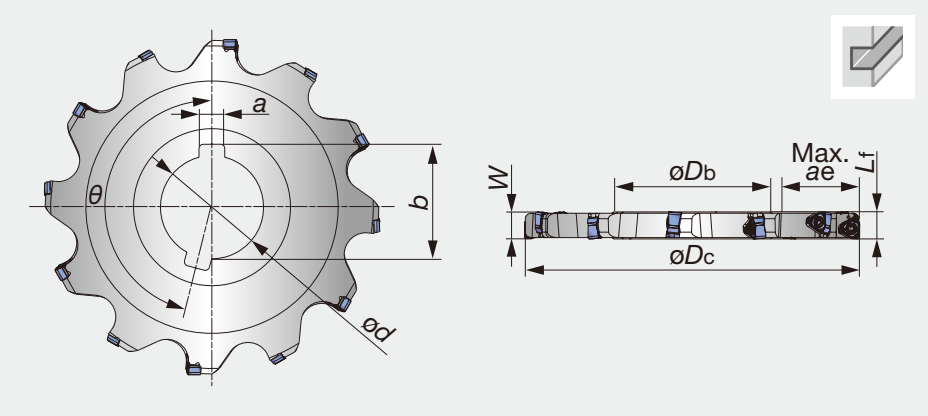

Designation	W	øDc	Z eff	øDb	ød	Lf	b	a	Max. ae	θ	z	Insert
ASW06N080-10	10	80	4	41	25.4	10	28	6.35	18.5	157.5°	8	WNGU0603**
ASW06N080-E10	10	80	4	41	27	10	29.8	7	18.5	157.5°	8	WNGU0603**
ASW06N100-10	10	100	5	48	31.75	10	35.2	7.92	25	162°	10	WNGU0603**
ASW06N100-E10	10	100	5	47	32	10	34.8	8	25.5	162°	10	WNGU0603**
ASW06N125-10	10	125	6	58	38.1	10	42.3	9.52	32.5	165°	12	WNGU0603**
ASW06N125-E10	10	125	6	55	40	10	43.5	10	34	165°	12	WNGU0603**
ASW06N160-10	10	160	7	58	38.1	10	42.3	9.52	50	167.14°	14	WNGU0603**
ASW06N160-E10	10	160	7	55	40	10	43.5	10	51.5	167.14°	14	WNGU0603**
ASW07N100-12	12	100	5	48	31.75	12	35.2	7.92	25	162°	10	WNGU07T3**
ASW07N100-E12	12	100	5	47	32	12	34.8	8	25.5	162°	10	WNGU07T3**
ASW07N125-12	12	125	6	58	38.1	12	42.3	9.52	32.5	165°	12	WNGU07T3**
ASW07N125-E12	12	125	6	55	40	12	43.5	10	34	165°	12	WNGU07T3**
ASW07N160-12	12	160	7	58	38.1	12	42.3	9.52	50	167.14°	14	WNGU07T3**
ASW07N160-E12	12	160	7	55	40	12	43.5	10	51.5	167.14°	14	WNGU07T3**
ASW09N100-14	14	100	5	48	31.75	14	35.2	7.92	25	162°	10	WNGU0904**
ASW09N100-E14	14	100	5	47	32	14	34.8	8	25.5	162°	10	WNGU0904**
ASW09N160-14	14	160	7	58	38.1	14	42.3	9.52	50	167.14°	14	WNGU0904**
ASW09N160-E14	14	160	7	55	40	14	43.5	10	51.5	167.14°	14	WNGU0904**
ASW09N160-16	16	160	7	58	38.1	16	42.3	9.52	50	167.14°	14	WNGU0904**
ASW09N160-E16	16	160	7	55	40	16	43.5	10	51.5	167.14°	14	WNGU0904**

SPARE PARTS

Designation	Clamping screw		Wrench			
			Mono block type	Bit	Grip	
ASW06N...	CSPB-2.5	-	IP-8D	-	-	-
ASW07N100...	CSPD-3	-	-	BLD IP10/S7	SW6-SD	-
ASW07N125...	CSPD-3	-	-	BLD IP10/S7	SW6-SD	-
ASW07N160...	CSPD-3	-	IP-10D	-	-	-
ASW09N100...	-	CSPB-3.5	-	BLD IP15/S7	-	H-TBS
ASW09N160...	-	CSPB-3.5	IP-15D	-	-	-

Radial drive type slot milling cutter

CUTTER - RADIAL DRIVE

TungUniversalSlot TSW + WNGU

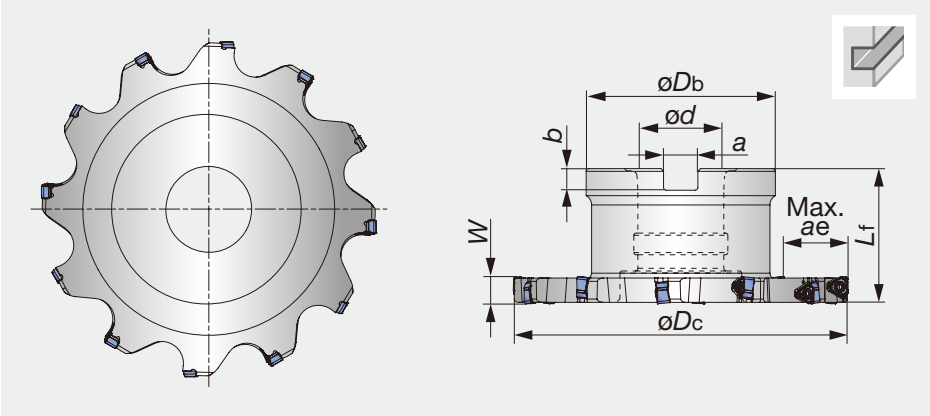

Designation	W	øDc	Z eff	øDb	ød	Lf	b	a	Max. ae	z	Insert
TSW06R100-10	10	100	5	50	25.4	50	6	9.5	24	10	WNGU0603**
TSW06R100-E10	10	100	5	58	27	50	7	12.4	20	10	WNGU0603**
TSW06R125-10	10	125	6	70	31.75	50	8	12.7	26.5	12	WNGU0603**
TSW06R125-E10	10	125	6	66	32	50	8	14.4	28.5	12	WNGU0603**
TSW06R160-10	10	160	7	100	38.1	63	10	15.9	29	14	WNGU0603**
TSW06R160-E10	10	160	7	82	40	63	9	16.4	38	14	WNGU0603**
TSW07R100-12	12	100	5	50	25.4	50	6	9.5	24	10	WNGU07T3**
TSW07R100-E12	12	100	5	58	27	50	7	12.4	20	10	WNGU07T3**
TSW07R125-12	12	125	6	70	31.75	50	8	12.7	26.5	12	WNGU07T3**
TSW07R125-E12	12	125	6	66	32	50	8	14.4	28.5	12	WNGU07T3**
TSW07R160-12	12	160	7	100	38.1	63	10	15.9	29	14	WNGU07T3**
TSW07R160-E12	12	160	7	82	40	63	9	16.4	38	14	WNGU07T3**
TSW09R160-16	16	160	7	100	38.1	63	10	15.9	29	14	WNGU0904**
TSW09R160-E16	16	160	7	82	40	63	9	16.4	38	14	WNGU0904**

SPARE PARTS

Designation	Clamping screw		Wrench		
			Mono block type	Bit	Grip
TSW06R...	CSPB-2.5	-	IP-8D	-	-
TSW07R100...	CSPD-3	-	-	BLD IP10/S7	SW6-SD
TSW07R125...	CSPD-3	-	-	BLD IP10/S7	SW6-SD
TSW07R160...	CSPD-3	-	IP-10D	-	-
TSW09R...	-	CSPB-3.5	IP-15D	-	-

Axial drive type slot milling cutter with tangentially mounted inserts

CUTTER - AXIAL DRIVE

TecTangentialSlot ASN + LMEU

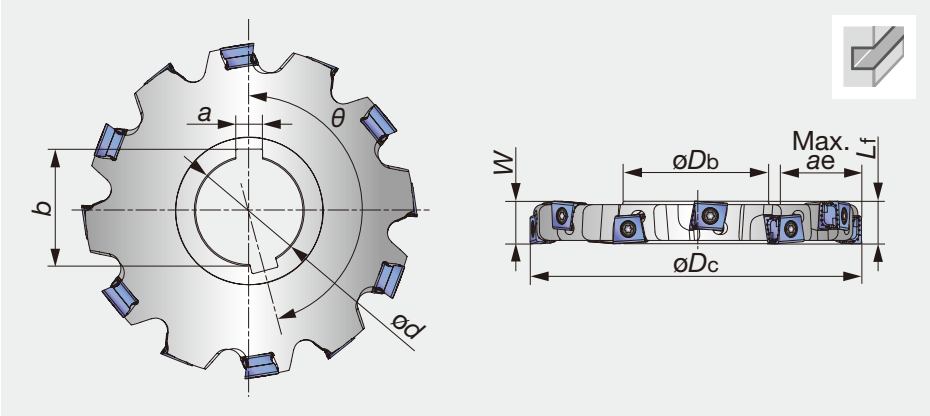

Designation	W	øDc	Z eff	øDb	ød	Lf	b	a	Max. ae	θ	z	Insert
ASN10R100M31.7-16-05	16	100	5	48	31.75	16	35.2	7.92	25	162°	10	LMEU1008**
ASN10R100M32.0E16-05	16	100	5	47	32	16	34.8	8	25.5	162°	10	LMEU1008**
ASN10R125M38.1-16-06	16	125	6	58	38.1	16	42.3	9.52	32.5	165°	12	LMEU1008**
ASN10R125M40.0E16-06	16	125	6	55	40	16	43.5	10	34	165°	12	LMEU1008**
ASN10R160M38.1-16-07	16	160	7	58	38.1	16	42.3	9.52	50	167.14°	14	LMEU1008**
ASN10R160M40.0E16-07	16	160	7	55	40	16	43.5	10	51.5	167.14°	14	LMEU1008**
ASN10R200M50.0E16-08	16	200	8	69	50	16	53.6	12	64.5	168.75°	16	LMEU1008**
ASN12R100M31.7-19-05	19	100	5	48	31.75	19	35.2	7.92	25	162°	10	LMEU1208**
ASN12R100M32.0E19-05	19	100	5	47	32	19	34.8	8	25.5	162°	10	LMEU1208**
ASN12R125M38.1-19-06	19	125	6	58	38.1	19	42.3	9.52	32.5	165°	12	LMEU1208**
ASN12R125M40.0E19-06	19	125	6	55	40	19	43.5	10	34	165°	12	LMEU1208**
ASN12R160M38.1-19-07	19	160	7	58	38.1	19	42.3	9.52	50	167.14°	14	LMEU1208**
ASN12R160M40.0E19-07	19	160	7	55	40	19	43.5	10	51.5	167.14°	14	LMEU1208**
ASN12R200M50.0E19-08	19	200	8	69	50	19	53.6	12	64.5	168.75°	16	LMEU1208**
ASN12R250M50.0E19-09	19	250	9	84	50	19	53.6	12	82	170°	18	LMEU1208**
ASN15R125M38.1-25-05	25	125	5	58	38.1	25	42.3	9.52	32.5	162°	10	LMEU1509**
ASN15R125M40.0E25-05	25	125	5	55	40	25	43.5	10	34	165°	10	LMEU1509**
ASN15R160M38.1-25-06	25	160	6	58	38.1	25	42.3	9.52	50	165°	12	LMEU1509**
ASN15R160M40.0E25-06	25	160	6	55	40	25	43.5	10	51.5	167.14°	12	LMEU1509**
ASN15R200M50.0E25-07	25	200	7	69	50	25	53.6	12	64.5	168.75°	14	LMEU1509**
ASN15R250M50.0E25-08	25	250	8	84	50	25	53.6	12	82	170°	16	LMEU1509**

SPARE PARTS



Designation	Clamping screw	Wrench	
		Bit	Grip
ASN10R...	SM40-143-H0	BT15S	H-TB
ASN12R...	SM40-143-H0	BT15S	H-TB
ASN15R...	CSTB-5L159	BT20S	H-TB

Radial drive type slot milling cutter with tangentially mounted inserts

CUTTER - RADIAL DRIVE

TecTangentialSlot TSN + LMEU

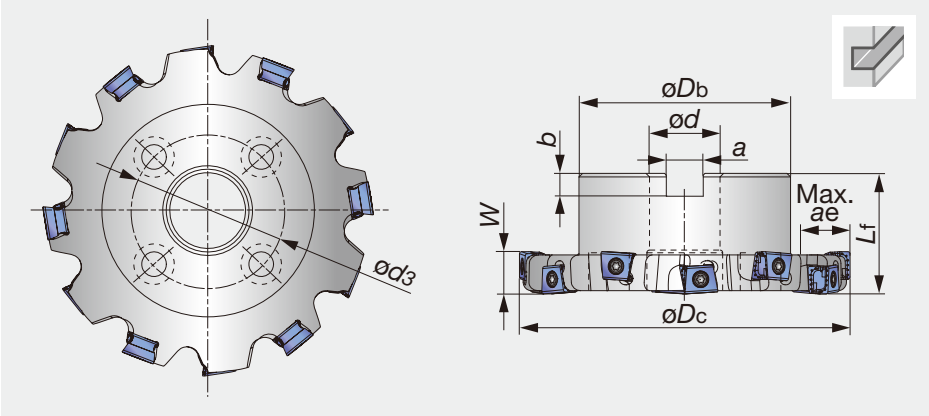

Designation	W	øDc	Z eff	øDb	ød	Lf	b	a	Max. ae	ød3	z	Insert
TSN10R100M25.4-16-05	16	100	5	50	25.4	50	6	9.5	24	-	10	LMEU1008**
TSN10R100M27.0E16-05	16	100	5	58	27	50	7	12.4	20	-	10	LMEU1008**
TSN10R125M31.7-16-06	16	125	6	70	31.75	50	8	12.7	26.5	-	12	LMEU1008**
TSN10R125M32.0E16-06	16	125	6	66	32	50	8	14.4	28.5	-	12	LMEU1008**
TSN10R160M38.1-16-07	16	160	7	100	38.1	63	10	15.9	29	-	14	LMEU1008**
TSN10R160M40.0E16-07	16	160	7	82	40	63	9	16.4	38	-	14	LMEU1008**
TSN10R200M47.6-16-08	16	200	8	135	47.625	63	14	25.4	31.5	101.6	16	LMEU1008**
TSN10R200M40.0E16-08	16	200	8	88	40	63	9	16.4	55	66.7	16	LMEU1008**
TSN12R100M25.4-19-05	19	100	5	50	25.4	50	6	9.5	24	-	10	LMEU1208**
TSN12R100M27.0E19-05	19	100	5	58	27	50	7	12.4	20	-	10	LMEU1208**
TSN12R125M31.7-19-06	19	125	6	70	31.75	50	8	12.7	26.5	-	12	LMEU1208**
TSN12R125M32.0E19-06	19	125	6	66	32	50	8	14.4	28.5	-	12	LMEU1208**
TSN12R160M38.1-19-07	19	160	7	100	38.1	63	10	15.9	29	-	14	LMEU1208**
TSN12R160M40.0E19-07	19	160	7	82	40	63	9	16.4	38	-	14	LMEU1208**
TSN12R200M40.0E19-08	19	200	8	88	40	63	9	16.4	55	66.7	16	LMEU1208**
TSN12R200M47.6-19-08	19	200	8	135	47.625	63	14	25.4	31.5	101.6	16	LMEU1208**
TSN12R250M47.6-19-09	19	250	9	140	47.625	63	14	25.4	54	101.6	18	LMEU1208**
TSN12R250M60.0E19-09	19	250	9	128	60	63	14	25.7	60	101.6	18	LMEU1208**
TSN15R125M31.7-25-05	25	125	5	70	31.75	50	8	12.7	26.5	-	10	LMEU1509**
TSN15R125M32.0E25-05	25	125	5	66	32	50	8	14.4	28.5	-	10	LMEU1509**
TSN15R160M38.1-25-06	25	160	6	100	38.1	63	10	15.9	29	-	12	LMEU1509**
TSN15R160M40.0E25-06	25	160	6	82	40	63	9	16.4	38	-	12	LMEU1509**
TSN15R200M40.0E25-07	25	200	7	88	40	63	9	16.4	55	66.7	14	LMEU1509**
TSN15R200M47.6-25-07	25	200	7	135	47.625	63	14	25.4	31.5	101.6	14	LMEU1509**
TSN15R250M47.6-25-08	25	250	8	140	47.625	63	14	25.4	54	101.6	16	LMEU1509**
TSN15R250M60.0E25-08	25	250	8	128	60	63	14	25.7	60	101.6	16	LMEU1509**

SPARE PARTS



Designation	Clamping screw	Wrench	
		Bit	Grip
TSN10R...	SM40-143-H0	BT15S	H-TB
TSN12R...	SM40-143-H0	BT15S	H-TB
TSN15R...	CSTB-5L159	BT20S	H-TB

INSERTS

TVKX-MJ

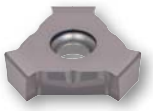

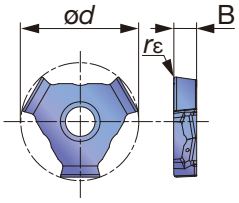

Designation	B	ød	rε	AH725				AH130				AH120			
TVKX020202TN-MJ	2.4	9.4	0.2	●	○		●							●	
TVKX020204TN-MJ	2.4	9.4	0.4	●	○		●							●	
TVKX03X302TN-MJ	3.2	9.4	0.2	●	○		●							●	
TVKX03X304TN-MJ	3.2	9.4	0.4	●	○		●							●	
TVKX04H304TN-MJ	3.5	16.9	0.4	●			●	○	●		○			●	
TVKX04H308TN-MJ	3.5	16.9	0.8	●			●	○	●		○			●	
TVKX050404TN-MJ	4.5	16.9	0.4	●			●	○	●		○			●	
TVKX050408TN-MJ	4.5	16.9	0.8	●			●	○	●		○			●	
				P	M	K	S	P	M	K	S	P	M	K	S

● First choice
Note: See page 9 for more information about grades.

WNGU-MJ

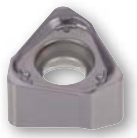

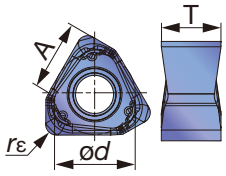

Designation	A	ød	T	rε	AH725				AH130				AH120			
WNGU060308TN-MJ	5.6	6.1	4.4	0.8	●			●	○	●		○			●	
WNGU060316TN-MJ	5.6	6.1	4.4	1.6	●			●	○	●		○			●	
WNGU07T308TN-MJ	6.8	7.4	5.5	0.8	●			●	○	●		○			●	
WNGU07T316TN-MJ	6.8	7.4	5.5	1.6	●			●	○	●		○			●	
WNGU090408TN-MJ	8.5	8.6	6.5	0.8	●			●	○	●		○			●	
WNGU090416TN-MJ	8.5	8.6	6.5	1.6	●			●	○	●		○			●	
					P	M	K	S	P	M	K	S	P	M	K	S

● First choice
Note: See page 9 for more information about grades.

LMEU-MJ

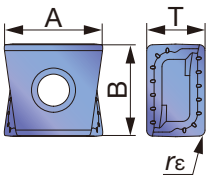

Designation	A	B	T	rε	AH725				AH140				AH120			
LMEU100808ZNEN-MJ	12.7	10.5	8	0.8	●			●	○	●					●	
LMEU100816ZNEN-MJ	12.5	10.5	8	1.6	●			●	○	●					●	
LMEU100824ZNEN-MJ	12.4	10.5	8	2.4	●			●	○	●					●	
LMEU100832ZNEN-MJ	12.2	10.5	8	3.2	●			●	○	●					●	
LMEU120808ZNEN-MJ	13.6	12.7	8	0.8	●			●	○	●					●	
LMEU120816ZNEN-MJ	13.4	12.7	8	1.6	●			●	○	●					●	
LMEU120824ZNEN-MJ	13.2	12.7	8	2.4	●			●	○	●					●	
LMEU120832ZNEN-MJ	13.1	12.7	8	3.2	●			●	○	●					●	
LMEU150908ZNEN-MJ	15.6	15	9.5	0.8	●			●	○	●					●	
LMEU150916ZNEN-MJ	15.4	15	9.5	1.6	●			●	○	●					●	
LMEU150924ZNEN-MJ	15.3	15	9.5	2.4	●			●	○	●					●	
LMEU150932ZNEN-MJ	15.1	15	9.5	3.2	●			●	○	●					●	
					P	M	K	S	P	M	K	S	P	M	K	S

● First choice
Note: See page 9 for more information about grades.

STANDARD CUTTING CONDITIONS

ISO	Workpiece materials	Hardness (HB)	Priority	Grades	Cutting speed *Vc* (m/min)	Feed per edge line: *fz* (mm/t) ASV *ae* / ø*Dc* (mm) 10%	20%
P	Low carbon steel (SS400 / E275A, etc.)	- 200	First choice	AH725	90 - 180	0.08 - 0.25	0.06 - 0.19
		- 200	For impact resistance	AH130, AH140	90 - 180	0.08 - 0.25	0.06 - 0.19
	High carbon steel (S45C / C45, etc.)	200 - 300	First choice	AH725	90 - 180	0.07 - 0.22	0.05 - 0.16
		200 - 300	For impact resistance	AH130, AH140	90 - 180	0.07 - 0.22	0.05 - 0.16
	Alloy steel (SCM440 / 42CrMo4, etc.)	150 - 300	First choice	AH725	90 - 180	0.07 - 0.22	0.05 - 0.16
		150 - 300	For impact resistance	AH130, AH140	90 - 180	0.07 - 0.22	0.05 - 0.16
	Tool steel (SKD61 / X40CrMoV5-1, etc.)	- 300	First choice	AH725	90 - 180	0.07 - 0.22	0.05 - 0.16
		- 300	For impact resistance	AH130, AH140	90 - 180	0.07 - 0.22	0.05 - 0.16
M	Stainless steel (SUS304 / X5CrNi18-9, etc.)	-	-	AH130, AH140	90 - 200	0.07 - 0.22	0.05 - 0.16
K	Grey cast iron (FC250 / 250, etc.)	150 - 250	-	AH120	120 - 230	0.08 - 0.25	0.06 - 0.19
	Ductile cast iron (FCD400, etc.)	150 - 250	-	AH120	90 - 150	0.08 - 0.25	0.06 - 0.19
S	Titanium alloys (Ti-6Al-4V, etc.)	-	First choice	AH725	30 - 40	0.07 - 0.12	0.05 - 0.09
		-	For impact resistance	AH130	30 - 40	0.07 - 0.12	0.05 - 0.09
	Nickel-based alloys (Inconel 718, etc.)	-	First choice	AH725	20 - 35	0.07 - 0.12	0.05 - 0.09
		-	For impact resistance	AH130	20 - 35	0.07 - 0.12	0.05 - 0.09

Feed per edge line: *fz* (mm/t)									
ASV		**TSW / ASW**				**TSN / ASN**			
***ae / øDc* (mm)**		***ae / øDc* (mm)**				***ae / øDc* (mm)**			
30%	**≤ 50%**	**10%**	**20%**	**30%**	**≤ 50%**	**10%**	**20%**	**30%**	**≤ 50%**
0.05 - 0.16	0.05 - 0.15	0.12 - 0.33	0.09 - 0.25	0.07 - 0.21	0.07 - 0.2	0.22 - 0.42	0.16 - 0.31	0.14 - 0.27	0.13 - 0.25
0.05 - 0.16	0.05 - 0.15	0.12 - 0.33	0.09 - 0.25	0.07 - 0.21	0.07 - 0.2	0.22 - 0.42	0.16 - 0.31	0.14 - 0.27	0.13 - 0.25
0.04 - 0.14	0.04 - 0.13	0.12 - 0.33	0.09 - 0.25	0.07 - 0.21	0.07 - 0.2	0.22 - 0.42	0.16 - 0.31	0.14 - 0.27	0.13 - 0.25
0.04 - 0.14	0.04 - 0.13	0.12 - 0.33	0.09 - 0.25	0.07 - 0.21	0.07 - 0.2	0.22 - 0.42	0.16 - 0.31	0.14 - 0.27	0.13 - 0.25
0.04 - 0.14	0.04 - 0.13	0.12 - 0.33	0.09 - 0.25	0.07 - 0.21	0.07 - 0.2	0.22 - 0.42	0.16 - 0.31	0.14 - 0.27	0.13 - 0.25
0.04 - 0.14	0.04 - 0.13	0.12 - 0.33	0.09 - 0.25	0.07 - 0.21	0.07 - 0.2	0.22 - 0.42	0.16 - 0.31	0.14 - 0.27	0.13 - 0.25
0.04 - 0.14	0.04 - 0.13	0.12 - 0.33	0.09 - 0.25	0.07 - 0.21	0.07 - 0.2	0.22 - 0.42	0.16 - 0.31	0.14 - 0.27	0.13 - 0.25
0.04 - 0.14	0.04 - 0.13	0.12 - 0.33	0.09 - 0.25	0.07 - 0.21	0.07 - 0.2	0.22 - 0.42	0.16 - 0.31	0.14 - 0.27	0.13 - 0.25
0.04 - 0.14	0.04 - 0.13	0.12 - 0.33	0.09 - 0.25	0.07 - 0.21	0.07 - 0.2	0.22 - 0.42	0.16 - 0.31	0.14 - 0.27	0.13 - 0.25
0.05 - 0.16	0.05 - 0.15	0.12 - 0.42	0.09 - 0.31	0.07 - 0.27	0.07 - 0.25	0.22 - 0.5	0.16 - 0.38	0.14 - 0.32	0.13 - 0.3
0.05 - 0.16	0.05 - 0.15	0.12 - 0.42	0.09 - 0.31	0.07 - 0.27	0.07 - 0.25	0.22 - 0.33	0.16 - 0.25	0.14 - 0.21	0.13 - 0.2
0.04 - 0.07	0.04 - 0.07	0.1 - 0.17	0.08 - 0.13	0.06 - 0.11	0.06 - 0.1	0.12 - 0.22	0.09 - 0.16	0.07 - 0.14	0.07 - 0.13
0.04 - 0.07	0.04 - 0.07	0.1 - 0.17	0.08 - 0.13	0.06 - 0.11	0.06 - 0.1	0.12 - 0.22	0.09 - 0.16	0.07 - 0.14	0.07 - 0.13
0.04 - 0.07	0.04 - 0.07	0.1 - 0.17	0.08 - 0.13	0.06 - 0.11	0.06 - 0.1	0.12 - 0.22	0.09 - 0.16	0.07 - 0.14	0.07 - 0.13
0.04 - 0.07	0.04 - 0.07	0.1 - 0.17	0.08 - 0.13	0.06 - 0.11	0.06 - 0.1	0.12 - 0.22	0.09 - 0.16	0.07 - 0.14	0.07 - 0.13

DoTriple-Mill TUNGALOY

Dovetail insert clamping guarantees high productivity

DoTriple-Mill features an improved dovetail clamping structure and offers triple advantage of using square, octagonal, and round inserts in the same pocket.

- 8-cornered and 16-cornered inserts with **dovetail structure for improved clamping rigidity:**

- Insert liftup and shear force on screws are reduced even in heavy machining.

- **Optimized geometry** for machining stainless steel with high nickel/ chrome content

- **Wiper edge** for square and octagonal inserts expands the application area for finishing.

- **Neutral insert is applicable on both right- and left-hand cutter bodies.**

- **Round insert for high-feed machining** and pocketing

- **Reduced chip packing:**

- Barrel shape chip when machining large depth of cut due to the concave shaped cutting edge.

TUNGFORCE MILL
ACCELERATED MACHINING

Line up:

Inserts available in square, octagonal, and round shapes which fit on the same cutter body:

SNGU13…MJ: 8-cornered insert with a wide self-wiper edge capable of machining depth of cut up to 6.5 mm (0.26"). Also available in a wiper insert with 2+2 cutting edges for right- and left-hand cutters.

ONGU05…MJ: 16-cornered economical insert with capability of machining depth of cut up to 3 mm (0.12"). Also available in 8-cornered wiper insert.

RNGU13…MJ: 8-cornered radius insert extending the application area to rough machining of crust surface at high feed and also to general machining up to 6 mm (0.24") depth of cut.

Cutter bodies:
Bore type **TASN**: Available in metric, JIS, and inch bores in coarse- and close-pitch designs.

Grades:
The newest **AH3135** and the popular **AH120** suitable for machining all materials


SNGU13..


ONGU05..


RNGU13..

Face milling cutter to seat double sided square, octagonal, round insert

CUTTER - BORE TYPE

DoTriple-Mill TASN13

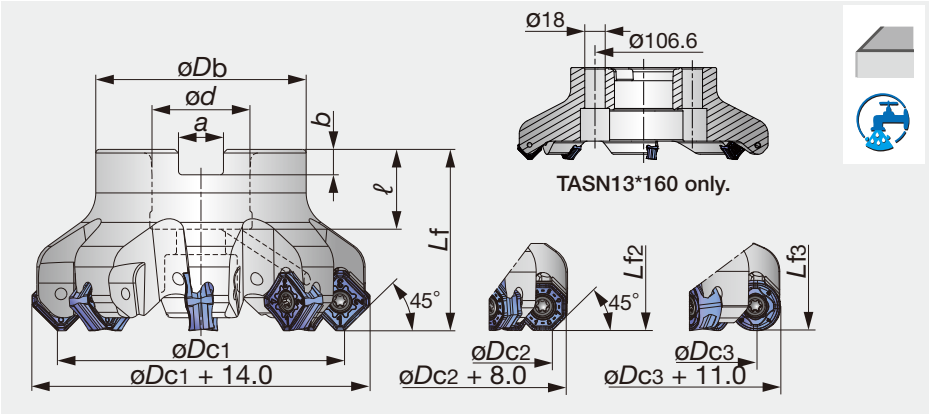

Right hand (R) shown.

Designation	øDc1	øDc2	øDc3	z	øDb	Lf1	Lf2	Lf3	ød	ℓ	a	b	Kg	C.bolt
TASN13M050B22.0R04	50.0	53.0	49.1	4	41	40.0	38.5	38.5	22.000	20.00	10.40	6.30	0.40	CM10X30H
TASN13M050B22.0R05	50.0	53.0	49.1	5	41	40.0	38.5	38.5	22.000	20.00	10.40	6.30	0.40	CM10X30H
TASN13M063B22.0R05	63.0	66.0	62.1	5	47	40.0	38.5	38.5	22.000	20.00	10.40	6.30	0.70	CM10X30H
TASN13M063B22.0R06	63.0	66.0	62.1	6	47	40.0	38.5	38.5	22.000	20.00	10.40	6.30	0.60	CM10X30H
TASN13M080B27.0R05	80.0	83.0	79.1	5	58	50.0	48.5	48.5	27.000	22.00	12.40	7.00	1.10	CM12X30H
TASN13M080B27.0R08	80.0	83.0	79.1	8	58	50.0	48.5	48.5	27.000	22.00	12.40	7.00	1.10	CM12X30H
TASN13J080B25.4R05	80.0	83.0	79.1	5	58	50.0	48.5	48.5	25.400	26.00	9.50	6.00	1.20	CM12X30H
TASN13J080B25.4R08	80.0	83.0	79.1	8	58	50.0	48.5	48.5	25.400	26.00	9.50	6.00	1.10	CM12X30H
TASN13M100B32.0R06	100.0	103.0	99.1	6	60	50.0	48.5	48.5	32.000	28.50	14.40	8.00	1.40	TMBA-M16H
TASN13M100B32.0R08	100.0	103.0	99.1	8	60	50.0	48.5	48.5	32.000	28.50	14.40	8.00	1.40	TMBA-M16H
TASN13J100B31.7R06	100.0	103.0	99.1	6	60	50.0	48.5	48.5	31.750	32.00	12.70	8.00	1.40	TMBA-M16H
TASN13J100B31.7R08	100.0	103.0	99.1	8	60	50.0	48.5	48.5	31.750	32.00	12.70	8.00	1.40	TMBA-M16H
TASN13M125B40.0R07	125.0	128.0	124.1	7	71	63.0	61.5	61.5	40.000	32.00	16.40	9.00	2.20	TMBA-M20H
TASN13M125B40.0R10	125.0	128.0	124.1	10	71	63.0	61.5	61.5	40.000	32.00	16.40	9.00	2.30	TMBA-M20H
TASN13J125B38.1R07	125.0	128.0	124.1	7	80	63.0	61.5	61.5	38.100	38.00	15.90	10.00	2.60	TMBA-M20H
TASN13J125B38.1R10	125.0	128.0	124.1	10	80	63.0	61.5	61.5	38.100	38.00	15.90	10.00	2.70	TMBA-M20H
TASN13M160B40.0R08	160.0	163.0	159.1	8	100	63.0	61.5	61.5	40.000	29.00	16.40	9.00	4.10	-
TASN13M160B40.0R12	160.0	163.0	159.1	12	100	63.0	61.5	61.5	40.000	29.00	16.40	9.00	4.20	-
TASN13J160B50.8R08	160.0	163.0	159.1	8	100	63.0	61.5	61.5	50.800	38.00	19.00	11.00	4.10	-
TASN13J160B50.8R12	160.0	163.0	159.1	12	100	63.0	61.5	61.5	50.800	38.00	19.00	11.00	4.20	-

Extra close-pitch cutters

Designation	øDc1	øDc2	øDc3	z	øDb	Lf1	Lf2	Lf3	ød	ℓ	a	b	Kg	C.bolt
TASN13M063B22.0R08	63.0	66.0	62.1	8	47	40.0	38.5	38.5	22.000	20.00	10.40	6.30	0.60	CM10X30H
TASN13M080B27.0R10	80.0	83.0	79.1	10	58	50.0	48.5	48.5	27.000	22.00	12.40	7.00	1.20	CM12X30H
TASN13J080B25.4R10	80.0	83.0	79.1	10	58	50.0	48.5	48.5	25.400	26.00	9.50	6.00	1.20	CM12X30H
TASN13M100B32.0R12	100.0	103.0	99.1	12	60	50.0	48.5	48.5	32.000	28.50	14.40	8.00	1.40	TMBA-M16H
TASN13J100B31.7R12	100.0	103.0	99.1	12	60	50.0	48.5	48.5	31.750	32.00	12.70	8.00	1.40	TMBA-M16H
TASN13M125B40.0R14	125.0	128.0	124.1	14	71	63.0	61.5	61.5	40.000	32.00	16.40	9.00	2.50	TMBA-M20H
TASN13J125B38.1R14	125.0	128.0	124.1	14	80	63.0	61.5	61.5	38.100	38.00	15.90	10.00	2.90	TMBA-M20H

SPARE PARTS

Designation	Clamping screw	Wrench	
		Torx Bit	Grip
TASN13... (ø*Dc*1 ≤ 125 mm)	CSPB-4	BLDIP15/S7	H-TB2W
TASN13... (ø*Dc*1 = 160 mm)	CSPB-4	BLDIP15/M7	H-TB2W

INSERTS

SNGU-MJ

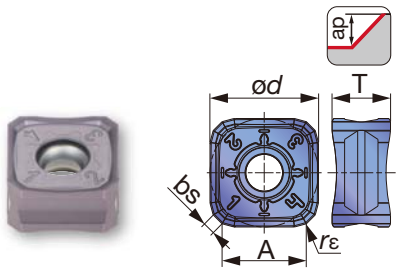

SNGU-W

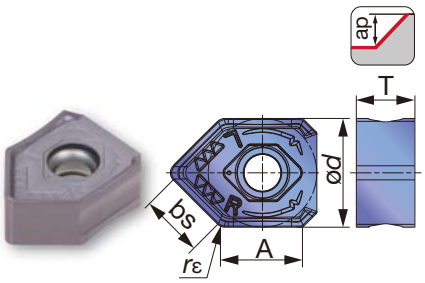

ONGU-MJ

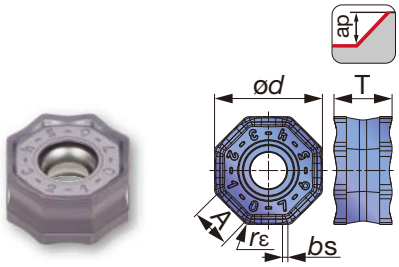

ONGU-W

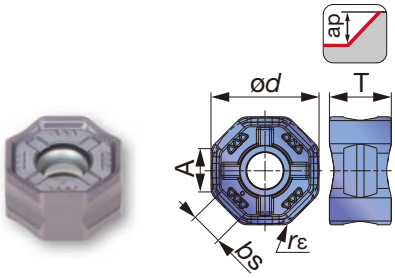

RNGU-MJ

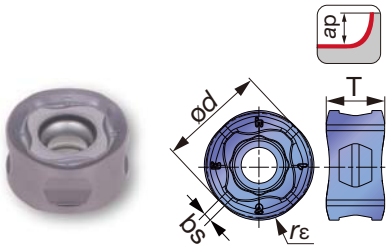

Designation	Max. ap	A	ød	T	rε	bs	AH3135					AH120				
							P	M	K	S	H	P	M	K	S	H
SNGU1307ANEN-MJ	6	9.4	13	7	0.5	2	●	●		●	●	○		●	●	●
SNGU1307ANEN-W	6	9.6	13	7	1.2	7.5	●	●		●	●	○		●	●	●
ONGU0507ANEN-MJ	3.4	4.9	13	7	0.8	0.7	●	●		●	●	○		●	●	●
ONGU0507ANEN-W	3.4	5	13	7.4	1.6	3.9	●	●		●	●	○		●	●	●
RNGU1307ZNER-MJ	6	--	13	7.1	6	1	●	●		●	●	○		●	●	●

● First choice

Note: See page 9 for more information about grades.

STANDARD CUTTING CONDITIONS

ISO	Workpiece materials		Hardness	Priority	Grades	Chip-breaker	Cutting speed *Vc* (m/min)	Feed per tooth *fz* (mm/t)
P	Low carbon steel (C15, etc.)		- 300 HB	First choice	AH3135	MJ	100 - 250	0.1 - 0.5
	High carbon and alloy steel (S55C / C55, SCM440 / 42CrMo4, etc.)		- 300 HB	First choice	AH3135	MJ	100 - 250	0.1 - 0.4
	Prehardened steel (NAK80, PX5, etc.)		30 - 40 HRC	First choice	AH3135	MJ	100 - 200	0.1 - 0.4
M	Stainless steel (SUS304 / X5CrNi18-9, SUS316 / X5CrNiMo17-12-3, etc.)		-	First choice	AH3135	MJ	100 - 200	0.1 - 0.35
K	Gray cast iron (FC250 / 250, etc.)		150 - 250 HB	First choice	AH120	MJ	100 - 250	0.1 - 0.5
	Ductile cast iron (400-15, FCD600 / 600-3, etc.)		150 - 250 HB	First choice	AH120	MJ	80 - 200	0.1 - 0.5
S	Titanium alloys (Ti-6Al-4V, etc.)		-	First choice	AH3135	MJ	30 - 60	0.1 - 0.3
	Heat-resistant alloys (Inconel718, etc.)		-	First choice	AH120	MJ	10 - 40	0.05 - 0.15
H	Hardened steel	(SKD61 / X40CrMoV5-1, etc.)	40 - 50 HRC	First choice	AH3135	MJ	80 - 130	0.1 - 0.2
		(SKD11 / X153CrMoV12, etc.)	50 - 60 HRC	First choice	AH120	MJ	50 - 70	0.03 - 0.1

Note: See page 9 for more information about grades.

MEMO

DOFEED
TUNGALOY

The ultimate high-feed cutter with maximum versatility

Multi-functionality of DoFeed, the new high-feed cutter series, cuts not only various materials but also machining time.

- **Perfectly designed insert:**

- Economical insert with **4 cutting edges**.

- Carefully designed positive geometry enables **smooth chip evacuation** and **minimal chattering with low cutting force**.

- **2 sizes of inserts** for different depths of cut and body diameters expand the application range.

- **4 different grades** for machining various materials and to suit a wide range of applications requiring toughness, high wear resistance, and so on.

- **The wiper insert** for the 06 pocket achieves **excellent surface finish** without compromising feed rates.

- Unused cutting edges are protected to avoid the damage during machining, which ensures the same tool life for each cutting edge.

- Close-pitch body design for high performance; coarse-pitch for anti-chatter.

TUNGFORCE MILL
ACCELERATED MACHINING

Line up:

Inserts :
LNMU03 (Max.*ap* = 1.0 mm / 0.039"), and **LNMU06** (Max.*ap* = 1.5 mm / 0.059") for high-feed machining

Cutter bodies:
Bore type **TXN03R** & **TXN06**: Available in metric, JIS, and inch bore sizes
Shank type **EXN03** & **EXN06**: Available in metric and inch shanks
Modular type **HXN03**: Available in metric thread connection to use with the standard TungFlex shanks
Available in coarse- and close-pitch designs

Chipbreakers:
MJ: Ideal for tough applications
ML: Applicable for gummy materials
W: Wiper insert for better bottom surface finish

Grades :
AH725: Suitable for a wide range of materials, including superalloys and hard materials
AH3035: Suitable for interrupted cutting of steel and hard materials, featuring excellent wear and fracture resistance
AH130: Suitable for titanium, stainless steel, and steel
AH120: Suitable for cast iron

LNMU03..MJ&ML chipbreaker

LNMU06..MJ & ML chipbreaker

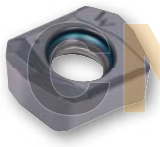

LNGU06X5ZER-W Wiper with 2 cutting edges

CUTTER - BORE TYPE

DoFeedMini TXN03

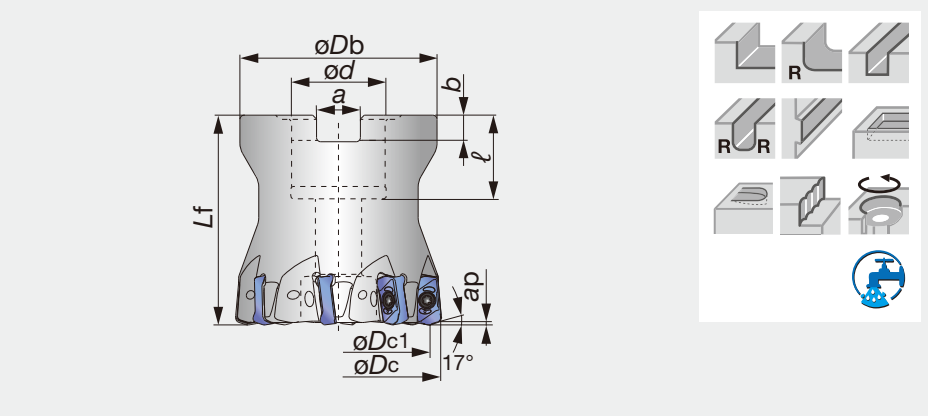

Designation	Max. ap	øDc	z	øDc1	øDb	ød	ℓ	Lf	b	a	Kg	C.bolt	Insert
TXN03R040M16.0E05	1.0	40	5	33.6	35	16	18	40	5.6	8.4	0.20	CM8X30H	LNMU03...
TXN03R040M16.0E06	1.0	40	6	33.6	35	16	18	40	5.6	8.4	0.20	CM8X30H	LNMU03...
TXN03R050M22.0E05	1.0	50	5	43.6	47	22	20	50	6.3	10.4	0.50	CM10X30H	LNMU03...
TXN03R050M22.0E08	1.0	50	8	43.6	47	22	20	50	6.3	10.4	0.50	CM10X30H	LNMU03...
TXN03R050M22.2-08	1.0	50	8	43.6	47	22.225	20	50	5.0	8.0	0.50	CM10X30H	LNMU03...

SPARE PARTS

Clamping screw	Wrench
CSPB-2.5	IP-8D

CUTTER - SHANK TYPE

DoFeedMini EXN03

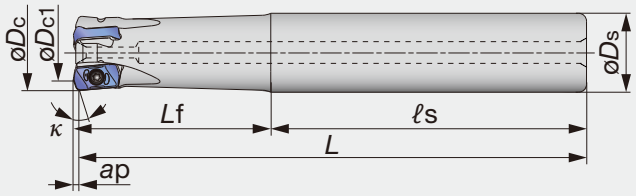

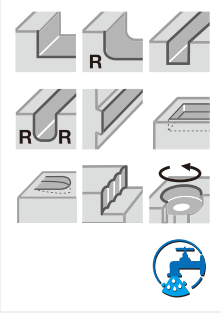

Designation	Max. ap	øDc	z	øDc1	øDs	L	Lf	ℓs	κ	Kg	Insert
EXN03R016M16.0-02	1.0	16	2	9.5	16	100	30	70	15	0.2	LNMU03...
EXN03R016M16.0-02L	1.0	16	2	9.5	16	150	50	100	15	0.2	LNMU03...
EXN03R018M16.0-02	1.0	18	2	11.5	16	100	30	70	17	0.2	LNMU03...
EXN03R018M16.0-02L	1.0	18	2	11.5	16	150	25	125	17	0.2	LNMU03...
EXN03R020M20.0-03	1.0	20	3	13.5	20	130	50	80	17	0.3	LNMU03...
EXN03R020M20.0-03L	1.0	20	3	13.5	20	160	80	80	17	0.3	LNMU03...
EXN03R020M20.0-04	1.0	20	4	13.5	20	130	50	80	17	0.3	LNMU03...
EXN03R022M20.0-03	1.0	22	3	15.5	20	130	50	80	17	0.3	LNMU03...
EXN03R022M20.0-03L	1.0	22	3	15.5	20	160	30	130	17	0.4	LNMU03...
EXN03R022M20.0-04	1.0	22	4	15.5	20	130	50	80	17	0.3	LNMU03...
EXN03R025M25.0-04	1.0	25	4	18.5	25	140	60	80	17	0.5	LNMU03...
EXN03R025M25.0-04L	1.0	25	4	18.5	25	180	100	80	17	0.6	LNMU03...
EXN03R025M25.0-05	1.0	25	5	18.5	25	140	60	80	17	0.5	LNMU03...
EXN03R028M25.0-04	1.0	28	4	21.5	25	140	60	80	17	0.5	LNMU03...
EXN03R028M25.0-04L	1.0	28	4	21.5	25	180	35	145	17	0.7	LNMU03...
EXN03R028M25.0-05	1.0	28	5	21.5	25	140	60	80	17	0.5	LNMU03...
EXN03R030M32.0-04	1.0	30	4	23.5	32	150	70	80	17	0.8	LNMU03...
EXN03R030M32.0-04L	1.0	30	4	23.5	32	200	120	80	17	0.9	LNMU03...
EXN03R030M32.0-05	1.0	30	5	23.5	32	150	70	80	17	0.8	LNMU03...
EXN03R032M32.0-05	1.0	32	5	25.5	32	150	70	80	17	0.8	LNMU03...
EXN03R032M32.0-05L	1.0	32	5	25.5	32	200	120	80	17	1.1	LNMU03...
EXN03R032M32.0-06	1.0	32	6	25.5	32	150	70	80	17	0.9	LNMU03...
EXN03R035M32.0-05	1.0	35	5	28.6	32	150	35	115	17	0.9	LNMU03...
EXN03R035M32.0-05L	1.0	35	5	28.5	32	200	35	165	17	0.2	LNMU03...
EXN03R035M32.0-06	1.0	35	6	28.5	32	150	35	115	17	0.9	LNMU03...

SPARE PARTS

Clamping screw	Wrench
CSPB-2.5	IP-8D

CUTTER - MODULAR TYPE

DoFeedMini HXN03-M

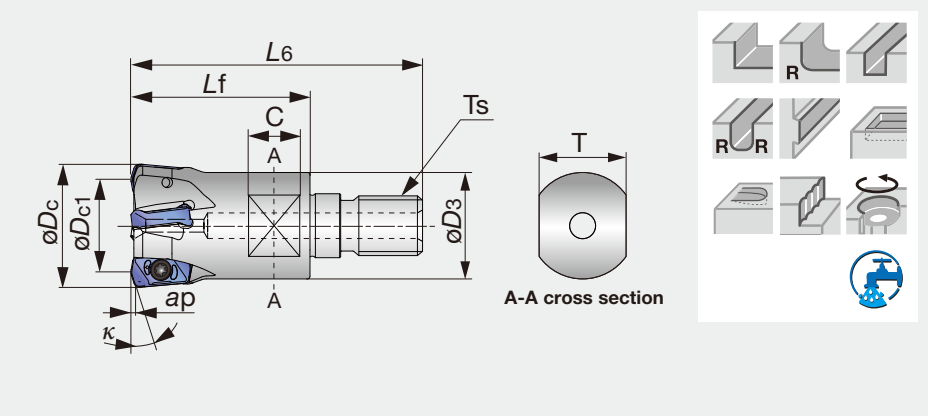

Designation	Max. ap	øDc	z	øDc1	L6	Lf	C	T	øD3	κ	Ts	Kg	Insert
HXN03R016MM08-02	1.0	16	2	9.5	42	25	8	10	12.8	15	M8	0.03	LNMU03...
HXN03R018MM08-02	1.0	18	2	11.5	42	25	8	10	14.5	17	M8	0.04	LNMU03...
HXN03R020MM10-03	1.0	20	3	13.6	49	30	10	15	17.8	17	M10	0.06	LNMU03...
HXN03R020MM10-04	1.0	20	4	13.5	49	30	10	15	17.8	17	M10	0.06	LNMU03...
HXN03R022MM10-03	1.0	22	3	15.6	49	30	10	15	17.8	17	M10	0.06	LNMU03...
HXN03R022MM10-04	1.0	22	4	15.5	49	30	10	15	17.8	17	M10	0.07	LNMU03...
HXN03R025MM12-04	1.0	25	4	18.5	57	35	10	17	20.8	17	M12	0.10	LNMU03...
HXN03R025MM12-05	1.0	25	5	18.5	57	35	10	17	20.8	17	M12	0.11	LNMU03...
HXN03R028MM12-04	1.0	28	4	21.6	57	35	10	17	23.0	17	M12	0.12	LNMU03...
HXN03R028MM12-05	1.0	28	5	21.5	57	35	10	17	23.0	17	M12	0.12	LNMU03...
HXN03R030MM16-04	1.0	30	4	23.6	63	40	12	22	28.8	17	M16	0.19	LNMU03...
HXN03R030MM16-05	1.0	30	5	23.5	63	40	12	22	28.8	17	M16	0.20	LNMU03...
HXN03R032MM16-05	1.0	32	5	25.5	63	40	12	22	28.8	17	M16	0.20	LNMU03...
HXN03R032MM16-06	1.0	32	6	25.5	63	40	12	22	28.8	17	M16	0.21	LNMU03...

SPARE PARTS


Clamping screw	Wrench
CSPB-2.5	IP-8D

Super high feed milling cutters with double sided inserts with 4 edges

CUTTER - BORE TYPE

DoFeed TXN06

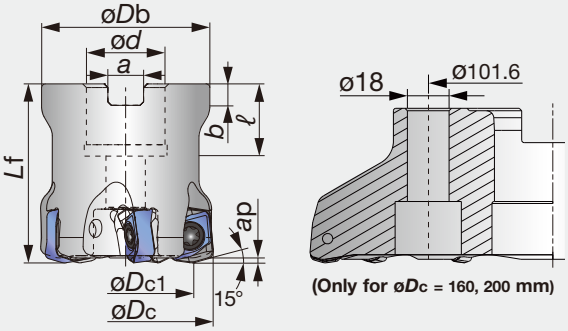

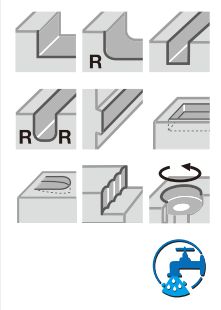

Designation	Max. ap	øDc	z	øDc1	øDb	ød	ℓ	Lf	b	a	Kg	C.bolt	Insert
TXN06R050M22.0E04	1.5	50	4	37.6	47	22	20	50	6.3	10.4	0.4	FSHM10-40H	LN*U06...
TXN06R050M22.0E05	1.5	50	5	37.6	47	22	20	50	6.3	10.4	0.4	FSHM10-40H	LN*U06...
TXN06R050M22.2-04	1.5	50	4	37.6	47	22	20	50	5	8	0.4	CM10X30H	LN*U06...
TXN06R050M22.2-05	1.5	50	5	37.6	47	22	20	50	5	8	0.4	FSHM10-40H	LN*U06...
TXN06R052M22.0E04	1.5	52	4	39.6	50	22	20	50	6.3	10.4	0.5	FSHM10-40H	LN*U06...
TXN06R052M22.0E05	1.5	52	5	39.6	49	22	20	50	6.3	10.4	0.5	FSHM10-40H	LN*U06...
TXN06R063M22.0E04	1.5	63	4	50.6	59	22	20	50	6.3	10.4	0.8	CM10X30H	LN*U06...
TXN06R063M22.0E06	1.5	63	6	50.6	59	22	20	50	6.3	10.4	0.8	CM10X30H	LN*U06...
TXN06R063M22.2-04	1.5	63	4	50.6	59	22	20	50	5	8	0.8	CM10X30H	LN*U06...
TXN06R063M22.2-06	1.5	63	6	50.6	59	22	20	50	5	8	0.8	CM10X30H	LN*U06...
TXN06R066M27.0E04	1.5	66	4	53.6	63	27	22	50	7	12.4	0.8	CM12X30H	LN*U06...
TXN06R066M27.0E06	1.5	66	6	53.6	63	27	22	50	7	12.4	0.8	CM12X30H	LN*U06...
TXN06R080M27.0E05	1.5	80	5	67.6	76	27	22	63	7	12.4	1.6	CM12X30H	LN*U06...
TXN06R080M27.0E08	1.5	80	8	67.6	76	27	22	63	7	12.4	1.6	CM12X30H	LN*U06...
TXN06R080M31.7-05	1.5	80	5	67.6	76	31	32	63	8	12.7	1.6	CM16X40H	LN*U06...
TXN06R080M31.7-08	1.5	80	8	67.6	76	31	32	63	8	12.7	1.6	CM16X40H	LN*U06...
TXN06R100M31.7-06	1.5	100	6	87.6	96	31	32	63	8	12.7	2.2	CM16X40H	LN*U06...
TXN06R100M32.0E06	1.5	100	6	87.6	96	32	25	63	8	14.4	2.2	CM16X40H	LN*U06...
TXN06R125M38.1-08	1.5	125	8	112.6	100	38	43	63	10	15.9	3	TMBA-M20H	LN*U06...
TXN06R125M40.0E08	1.5	125	8	112.6	100	40	37	63	9	16.4	3	TMBA-M20H	LN*U06...
TXN06R160M40.0E10	1.5	160	10	147.6	100	40	37	63	9	16.4	5	TMBA-M20H	LN*U06...
TXN06R160M50.8-10	1.5	160	10	147.6	100	50	46	63	11	19	4.6	TMBA-M24H	LN*U06...
TXN06R200M47.6-12	1.5	200	12	187.6	130	47	38	63	14	25.4	7.7	-	LN*U06...
TXN06R200M60.0E12	1.5	200	12	187.6	130	60	38	63	14	25.7	7.2	-	LN*U06...

SPARE PARTS

Designation	Clamping Screw	Wrench	
		Bit	Handle
≤ ø125	CSPB-5	BLD IP20/S7	H-TBS
ø160 , 200	CSPB-5	BLD IP20/M7	H-TBS

CUTTER - SHANK TYPE

DoFeed EXN06

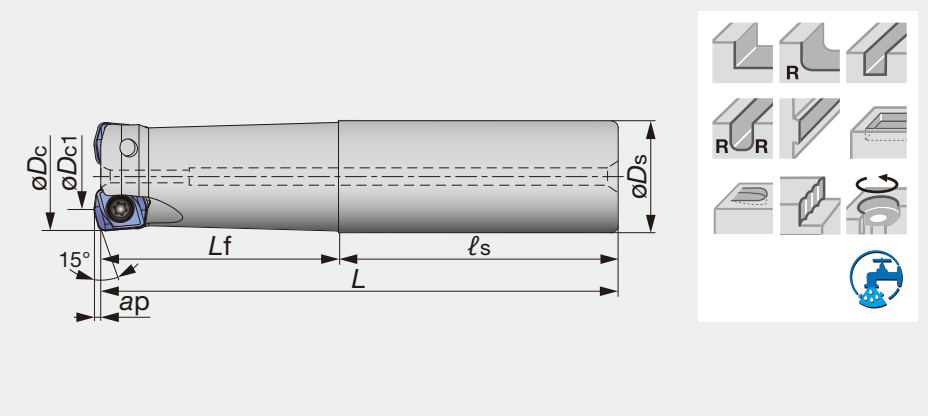

Designation	Max. ap	øDc	z	øDc1	øDs	L	Lf	ℓs	Kg	Insert
EXN06R032M32.0-02	1.5	32	2	19.7	32	150	70	80	0.8	LN*U06...
EXN06R032M32.0-02L	1.5	32	2	19.7	32	200	120	80	1.1	LN*U06...
EXN06R035M32.0-02	1.5	35	2	22.7	32	150	45	105	0.9	LN*U06...
EXN06R035M32.0-02L	1.5	35	2	22.7	32	200	45	155	1.2	LN*U06...
EXN06R040M32.0-03	1.5	40	3	27.5	32	150	45	105	0.9	LN*U06...
EXN06R040M32.0-03L	1.5	40	3	27.5	32	220	45	175	1.3	LN*U06...

SPARE PARTS

Clamping screw	Wrench
CSPB-5	IP-20D

INSERTS

MJ (for general purpose)

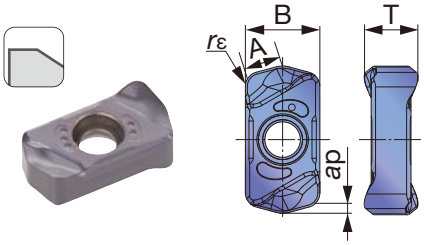

ML (for low cutting force)

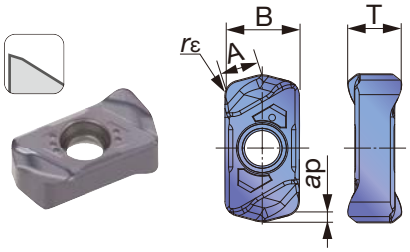

Designation	Max. ap	A	B	T	rε	AH725					AH130					AH3035				
LNMU0303ZER-MJ	1	3.2	6	4.3	1.2	●		●	●	●		●		○		●				●
LNMU0303ZER-ML	1	3.2	6	4.3	1.2	○		○	●			●		○		●	○			
						P	M	K	S	H	P	M	K	S	H	P	M	K	S	H

● First choice

Note: See page 9 for more information about grades.

MJ (for general purpose)

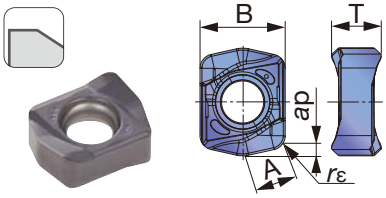

ML (for low cutting force)

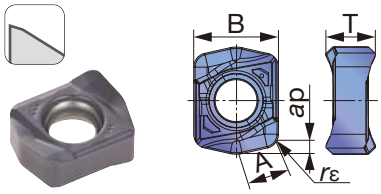

W (Wiper insert)

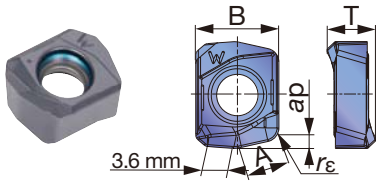

Designation	Max. ap	A	B	T	rε	AH725					AH120					AH130					AH3035				
LNMU06X5ZER-MJ	1.5	6	12	7	2	●		○	●	●	○		●				●		○		●				●
LNMU06X5ZER-ML	1.5	6	12	7	2	○			●				○				●		○		●	○			
LNGU06X5ZER-W	1.5	6	12	7	2	●	●	●	●	●															
						P	M	K	S	H	P	M	K	S	H	P	M	K	S	H	P	M	K	S	H

● First choice

Note: See page 9 for more information about grades.

TXN03 / EXN03 / HXN03 type

STANDARD CUTTING CONDITIONS

ISO	Workpiece materials	Hardness	Priority	Grades	Chip-breaker	Cutting speed *Vc* (m/min)	Feed per tooth: *fz* (mm/t) Tool dia: ø*Dc* (mm) ø16 - ø22	ø25 - ø50	Plunging
P	Carbon steel (S45C /C45, S55C / C55, etc.)	- 300 HB	First choice	AH725	MJ	100 - 300	0.5 - 1.2	0.5 - 1.5	0.1
			For low cutting force	AH725	ML	100 - 300	0.5 - 0.7	0.5 - 1.0	0.1
			For impact resistance	AH3035	MJ	100 - 300	0.5 - 1.2	0.5 - 1.5	0.1
	Alloy steel (SCM440 / 42CrMo4, SCr415, etc.)	- 300 HB	First choice	AH725	MJ	100 - 200	0.5 - 1.2	0.5 - 1.5	0.1
			For low cutting force	AH725	ML	100 - 200	0.5 - 0.7	0.5 - 1.0	0.1
			For impact resistance	AH3035	MJ	100 - 200	0.5 - 1.2	0.5 - 1.5	0.1
	Prehardened steel (NAK80, PX5, etc.)	30 - 40 HRC	-	AH3035	ML	100 - 200	0.5 - 0.7	0.5 - 1.0	0.1
M	Stainless steel (SUS304 / X5CrNi18-9, SUS316 / X5CrNiMo17-12-3, etc.)	- 200 HB	First choice	AH130	ML	100 - 150	0.3 - 0.5	0.3 - 0.7	0.08
			For impact resistance	AH130	MJ	100 - 150	0.3 - 0.8	0.3 - 0.8	0.08
K	Gray cast iron (FC250 / 250 / GG25, FC300 / 300 / GG30, etc.)	150 - 250 HB	First choice	AH725	MJ	100 - 300	0.5 - 1.2	0.5 - 1.5	0.1
			For low cutting force	AH725	ML	100 - 300	0.5 - 0.7	0.5 - 1.0	0.1
	Ductile cast iron (FC400 / GGG40, etc.)	150 - 250 HB	First choice	AH725	MJ	80 - 200	0.5 - 1.2	0.5 - 1.5	0.1
			For low cutting force	AH725	ML	80 - 200	0.5 - 0.7	0.5 - 1.0	0.1
S	Titanium alloys (Ti-6Al-4V, etc.)	- 40 HRC	-	AH725	ML	30 - 60	0.3 - 0.5	0.3 - 0.7	0.08
	Heat-resistant alloys (Inconel, Hastelloy, etc.)	- 40 HRC	-	AH725	MJ	20 - 50	0.1 - 0.2	0.1 - 0.3	0.05
H	Hardened steel (SKD61 / X40CrMoV5-1, etc.)	40 - 50 HRC	First choice	AH3035	MJ	80 - 130	0.1 - 0.2	0.1 - 0.3	0.05
			For wear resistance	AH725	MJ	80 - 130	0.1 - 0.2	0.1 - 0.3	0.05
	Hardened steel (SKD11 / X153CrMoV12, etc.)	50 - 60 HRC	First choice	AH725	MJ	50 - 70	0.03 - 0.05	0.03 - 0.07	0.03
			For impact resistance	AH3035	MJ	50 - 70	0.03 - 0.05	0.03 - 0.07	0.03

· When chips stay in the cutting zone during slotting or pocketing, use an air blast to remove chips from the work area.

· Tool overhang length must be as short as possible to avoid chatter. When the tool overhang length is long, decrease the number of revolutions and feed.

MACHINING APPLICATIONS

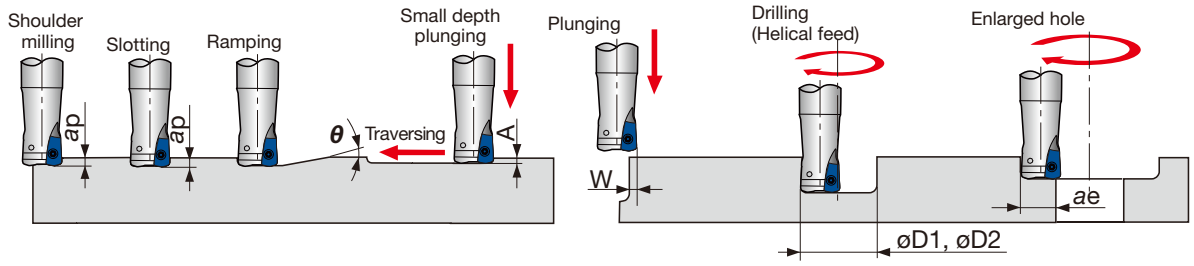

Designation	ø*Dc*	Max. depth of cut *ap*	Max. ramping angle θ	Max. plunging A	Max. cutting width in plunging *W*	Min. machining ø*D1*	Max. machining ø*D2*	Max. cutting width in enlarging *ae*
E/HXN03R016M...	ø16	1.0	2.1°	0.3	3.5	22	30	12.5
E/HXN03R018M...	ø18	1.0	1.7°	0.3	3.5	26	34	14.5
E/HXN03R020M...	ø20	1.0	1.4°	0.3	3.5	30	38	16.5
E/HXN03R022M...	ø22	1.0	1.2°	0.3	3.5	34	42	18.5
E/HXN03R025M...	ø25	1.0	1.0°	0.3	3.5	40	48	21.5
E/HXN03R028M...	ø28	1.0	0.8°	0.3	3.5	46	54	24.5
E/HXN03R030M...	ø30	1.0	0.7°	0.3	3.5	50	58	26.5
E/HXN03R032M...	ø32	1.0	0.7°	0.3	3.5	54	62	28.5
EXN03R035M32.0...	ø35	1.0	0.6°	0.3	3.5	60	68	31.5
TXN03R040M16.0...	ø40	1.0	0.5°	0.3	3.5	70	78	36.5
TXN03R050M-22....	ø50	1.0	0.4°	0.3	3.5	90	98	46.5

- For ø*Dc* above ø33 mm, slot milling, ramping or contouring is not recommended as chips may be re-cut.

TXN06 / EXN06 type

STANDARD CUTTING CONDITIONS

ISO	Workpiece materials		Hardness	Priority	Grades	Chip-breaker	Cutting speed *Vc* (m/min)	Feed per tooth: *fz* (mm/t) Tool dia: *øDc* (mm) ø32 - ø200	Feed per tooth: *fz* (mm/t) Plunging
P	Carbon steel (S45C /C45, S55C / C55, etc.)		- 300HB	First choice	AH725	MJ	100 - 300	0.5 - 1.5	0.15
				For wear resistance	AH120	MJ	100 - 300	0.5 - 1.5	0.15
				For impact resistance	AH3035	MJ	100 - 300	0.5 - 1.5	0.15
	Alloy steel (SCM440 / 42CrMo4, SCr415, etc.)		- 300HB	First choice	AH725	MJ	100 - 200	0.5 - 1.5	0.15
				For wear resistance	AH120	MJ	100 - 200	0.5 - 1.5	0.15
				For impact resistance	AH3035	MJ	100 - 200	0.5 - 1.5	0.15
	Prehardened steel (NAK80, PX5, etc.)		30 - 40HRC	-	AH3035	ML	100 - 200	0.5 - 1.0	0.15
M	Stainless steel (SUS304 / X5CrNi18-9, SUS316 / X5CrNiMo17-12-3, etc.)		- 200HB	First choice	AH130	ML	100 - 150	0.3 - 0.7	0.1
				For impact resistance	AH130	MJ	100 - 150	0.3 - 0.8	0.1
K	Gray cast iron (FC250 / 250 / GG25, FC300 / 300 / GG30, etc.)		150 - 250HB	First choice	AH120	MJ	100 - 300	0.5 - 1.5	0.15
				For low cutting force	AH120	ML	100 - 300	0.5 - 1.0	0.15
	Ductile cast iron (FC400 / GGG40, etc.)		150 - 250HB	First choice	AH120	MJ	80 - 200	0.5 - 1.5	0.15
				For low cutting force	AH120	ML	80 - 200	0.5 - 1.0	0.15
S	Titanium alloys (Ti-6Al-4V, etc.)		- 40HRC	-	AH725	ML	30 - 60	0.3 - 0.7	0.08
	Heat-resistant alloys (Inconel, Hastelloy, etc.)		- 40HRC	-	AH725	MJ	20 - 50	0.1 - 0.3	0.05
H	Hardened steel	(SKD61 / X40CrMoV5-1, etc.)	40 - 50HRC	First choice	AH3035	MJ	80 - 130	0.1 - 0.3	0.05
				For wear resistance	AH725	MJ	80 - 130	0.1 - 0.3	0.05
		(SKD11 / X153CrMoV12, etc.)	50 - 60HRC	First choice	AH725	MJ	50 - 70	0.03 - 0.07	0.03
				For impact resistance	AH3035	MJ	50 - 70	0.03 - 0.07	0.03

· When chips stay in the cutting zone during slotting or pocketing, use an air blast to remove chips from the work area.

· Tool overhang length must be as short as possible to avoid chatter. When the tool overhang length is long, decrease the number of revolutions and feed.

MACHINING APPLICATIONS

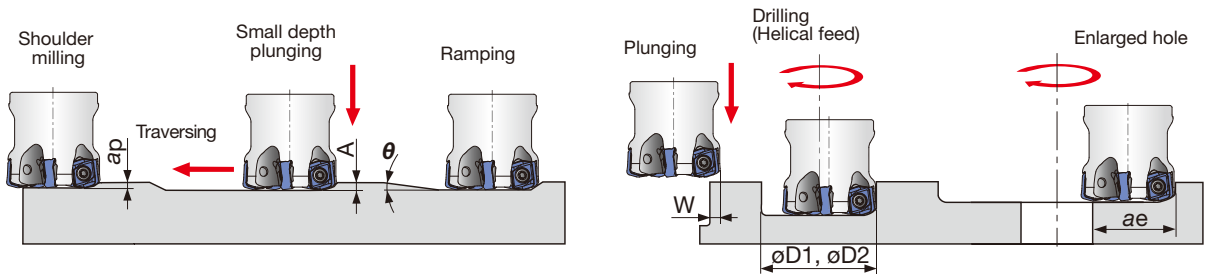

Designation	*øDc*	Max. depth of cut *ap*	Max. ramping angle θ	Max. plunging A	Max. cutting width in plunging *W*	Min. machining *øD1*	Max. machining *øD2*	Max. cutting width in enlarging *ae*
EXN06R032M32.0...	ø32	1.5	2.0°	0.5	6.0	47	59	25
EXN06R035M32.0...	ø35	1.5	1.7°	0.5	6.0	53	65	28
EXN06R040M32.0...	ø40	1.5	1.3°	0.5	6.0	63	75	33
TXN06R050M...	ø50	1.5	0.9°	0.5	6.0	83	95	43
TXN06R052M...	ø52	1.5	0.8°	0.5	6.0	85	97	45
TXN06R063M...	ø63	1.5	0.6°	0.5	6.0	109	121	56
TXN06R066M...	ø66	1.5	0.5°	0.5	6.0	112	124	59
TXN06R080M...	ø80	1.5	0.5°	0.5	6.0	143	155	73

- For *øDc* above ø100 mm, slot milling, ramping or contouring is not recommended as chips may be re-cut.

MILLQUAD FEED
TUNGALOY

Powerful high-feed milling cutter with improved metal removal rate

MillQuadFeed, simple but powerful high-feed milling cutter for large depths of cut, boosts performance and productivity.

- Square-shaped insert with **4 cutting edges and positive flank** clearance:

- Reinforced flank surface for **high fracture resistance**.

- Special clearance on flank **improves ramping capability.**

- Outstanding productivity due to **large depth of cut** at 2.5 (0.98") mm and high feed/tooth up to 2 mm/tooth (0.078 ipt).

- Large corner radius of the insert contacting the bottom of the workpiece helps withstand impact in machining.

- Large corner radius contacting the side wall of the workpiece increases fracture strength in machining with multiple depths of cut.

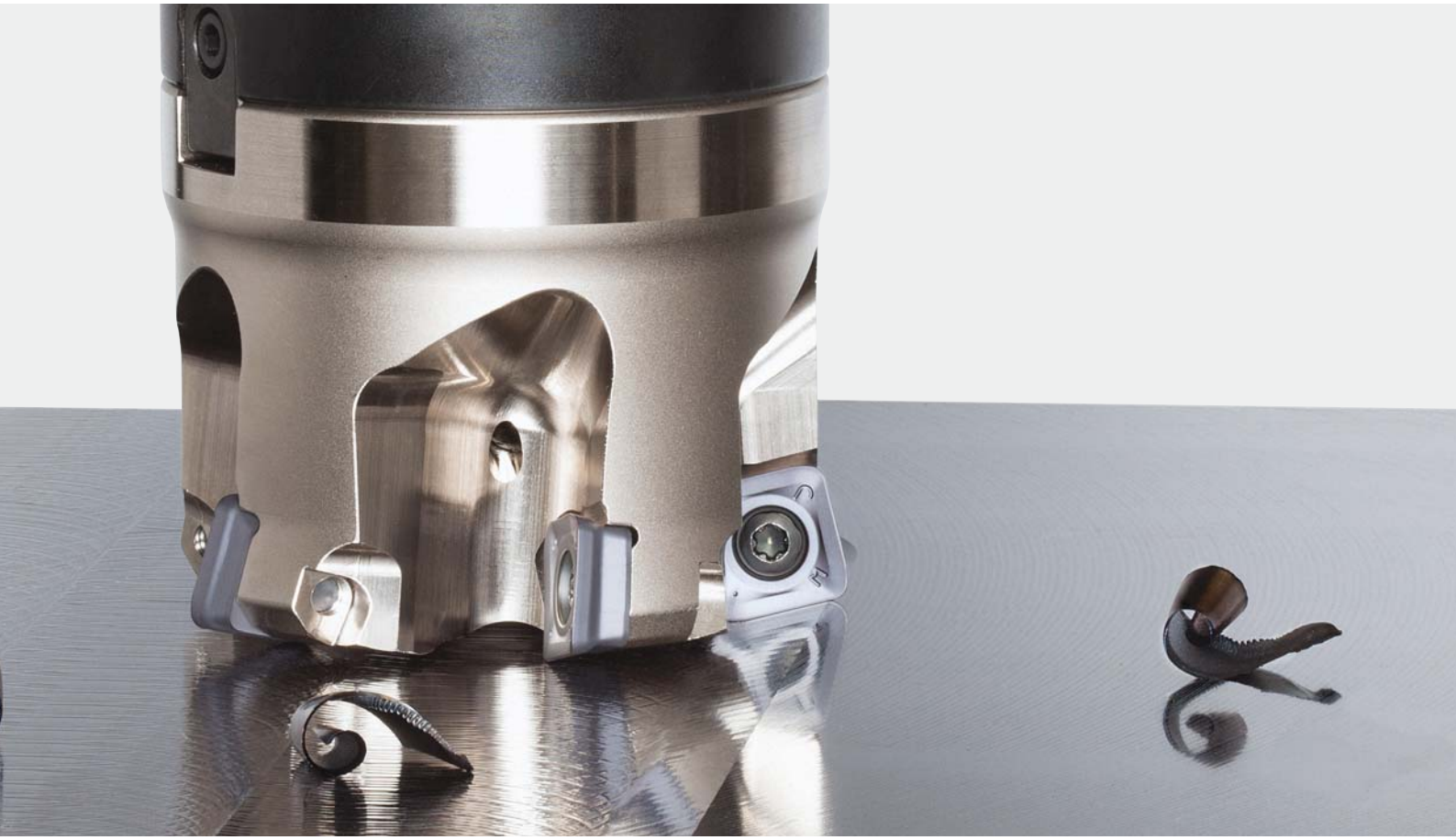

TUNGFORCE MILL
ACCELERATED MACHINING

Line up:

MJ chipbreaker for **SWMT15 insert**:
Comprises a wide T-land to withstand impact loads
The wide T-land followed by a positive rake geometry allows maximum chip thickness up to 0.48 mm (0.019") and prevents chips from contacting the machined surface

Cutter bodies:
Bore type **TXSW15**: Available in metric, JIS, and inch bores

Grades:
The newest **AH3135** and the popular **AH120** suitable for machining cast iron, hardened steel, and superalloys

SWMT-MJ

CUTTER - BORE TYPE

MillQuadFeed TXSW

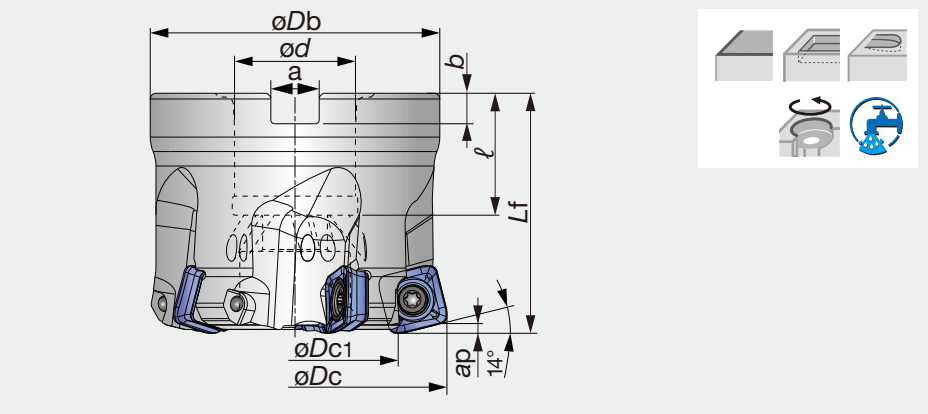

Designation	Max. ap	øDc	z	øDc1	øDb	Lf	ød	ℓ	a	b	Kg	C.bolt	Insert
TXSW15M050B22.0R03	2.5	50.00	3	24.1	47	50.0	22.000	20.00	8.00	5.00	0.40	SR PS 118-0273	SWMT15**
TXSW15M063B22.0R04	2.5	63.00	4	37.1	59	50.0	22.000	20.00	8.00	5.00	0.66	FSHM10-40H	SWMT15**
TXSW15J080B31.7R05	2.5	80.00	5	54.1	76	63.0	31.750	32.00	12.70	8.00	1.31	CM16X40H	SWMT15**
TXSW15M080B27.0R05	2.5	80.00	5	54.1	76	63.0	27.000	22.00	12.40	7.00	1.41	CM12X30H	SWMT15**
TXSW15J100B31.7R06	2.5	100.00	6	74.1	96	63.0	31.750	32.00	12.70	8.00	2.25	CM16X40H	SWMT15**
TXSW15M100B32.0R06	2.5	100.00	6	74.1	96	63.0	32.000	25.00	14.40	8.00	2.26	CM16X40H	SWMT15**
TXSW15J125B38.1R07	2.5	125.00	7	99.1	100	63.0	38.100	38.00	15.90	10.00	2.91	TMBA-M20H	SWMT15**
TXSW15M125B40.0R07	2.5	125.00	7	99.1	100	63.0	40.000	32.00	16.40	9.00	2.83	TMBA-M20H	SWMT15**
TXSW15J160B50.8R08	2.5	160.00	8	134.1	100	63.0	50.800	46.00	19.00	11.00	3.93	TMBA-M24H	SWMT15**
TXSW15M160B40.0R08	2.5	160.00	8	134.1	100	63.0	40.000	32.00	16.40	9.00	4.23	TMBA-M20H	SWMT15**

SPARE PARTS



øDc	Clamping Screw	Wrench	
		Torx Bit	Handle
≤ ø100	TS50115I	BT20S	H-TB2W
ø125 , 160	TS50115I	BT20M	H-TB2W

INSERT

SWMT-MJ

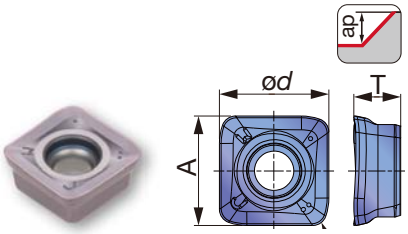

Designation	Max. ap	A	ød	T	rε	AH3135					AH120				
SWMT1506ZER-MJ	2.5	15.875	15.875	6.8	2	●	●		●		○		●		●
						P	M	K	S	H	P	M	K	S	H

● First choice
Note: See page 9 for more information about grades.

STANDARD CUTTING CONDITIONS

ISO	Workpiece materials		Hardness	Priority	Grades	Chip-breaker	Cutting speed Vc (m/min)	Feed per tooth fz (mm/t)
P	Low carbon steel (S15C / C15E4, SS400 / E275A, etc.)		- 300 HB	First choice	AH3135	MJ	100 - 300	0.5 - 2.0
			- 300 HB	Second choice	AH120	MJ	100 - 300	0.5 - 2.0
	Carbon steel and alloy steel (S55C / C55, SCM440 / 42CrMo4, etc.)		- 300 HB	First choice	AH3135	MJ	100 - 200	0.5 - 2.0
			- 300 HB	Second choice	AH120	MJ	100 - 200	0.5 - 2.0
	Prehardened steel (NAK80, PX5, etc.)		30 - 40 HRC	First choice	AH3135	MJ	100 - 200	0.5 - 1.5
			30 - 40 HRC	Second choice	AH120	MJ	100 - 200	0.5 - 1.5
M	Stainless steel (SUS304 / X5CrNi18-9, SUS316 / X5CrNiMo17-12-3, etc.)		- 200 HB	First choice	AH3135	MJ	100 - 150	0.3 - 1.0
K	Grey cast iron (FC250 / 250, FC300 / 300, etc.)		150 -250 HB	First choice	AH120	MJ	100 - 300	0.5 - 2.0
	Ductile cast iron (FC400, FCD600 / 600-3, etc.)		150 -250 HB	First choice	AH120	MJ	80 - 200	0.5 - 2.0
S	Titanium alloys (Ti-6Al-4V, etc.)		- 40 HRC	First choice	AH3135	MJ	30 - 60	0.3 - 0.7
	Superalloys (Inconel718, etc.)		- 40 HRC	First choice	AH120	MJ	20 - 50	0.1 - 0.3
H	Hardened steel	(SKD61 / X40CrMoV5-1, etc.)	40 - 50 HRC	First choice	AH3135	MJ	80 - 130	0.1 - 0.3
		(SKD11 / X153CrMoV12, etc.)	50 - 60 HRC	First choice	AH120	MJ	50 - 70	0.03 - 0.07

Note: See page 9 for more information about grades.

DoTwistBall TUNGALOY

New tools with unique insert design which ensures high stability for incredible productivity

DoTwistBall features a unique twisted-shape insert in radius as well as high-feed geometry which is clamped on a cross surface, assuring accurate fixation with high stability.

- Rectangular shape and twisted clamping insert seat **guarantee the insert's anti-rotation**, which is difficult to achieve for radius cutters.

- **Optimized insert geometry:**

- The inclination on helical cutting edge forms small chips, delivering **incredible cutting performance**.

- **Raised cutting edge** from the seating surface avoids the chip contact with the screw head, extending screw life.

- The large clamping screw **increases reliability at high feed**.

- Geometry of cross section around the cutting edge is improved compared to round inserts.

- **Insert ensures 4-corner** usage without damaging the unused cutting edges.

- Both radius type and high feed type inserts fit in the same cutter (cutter size: 04 and 06)

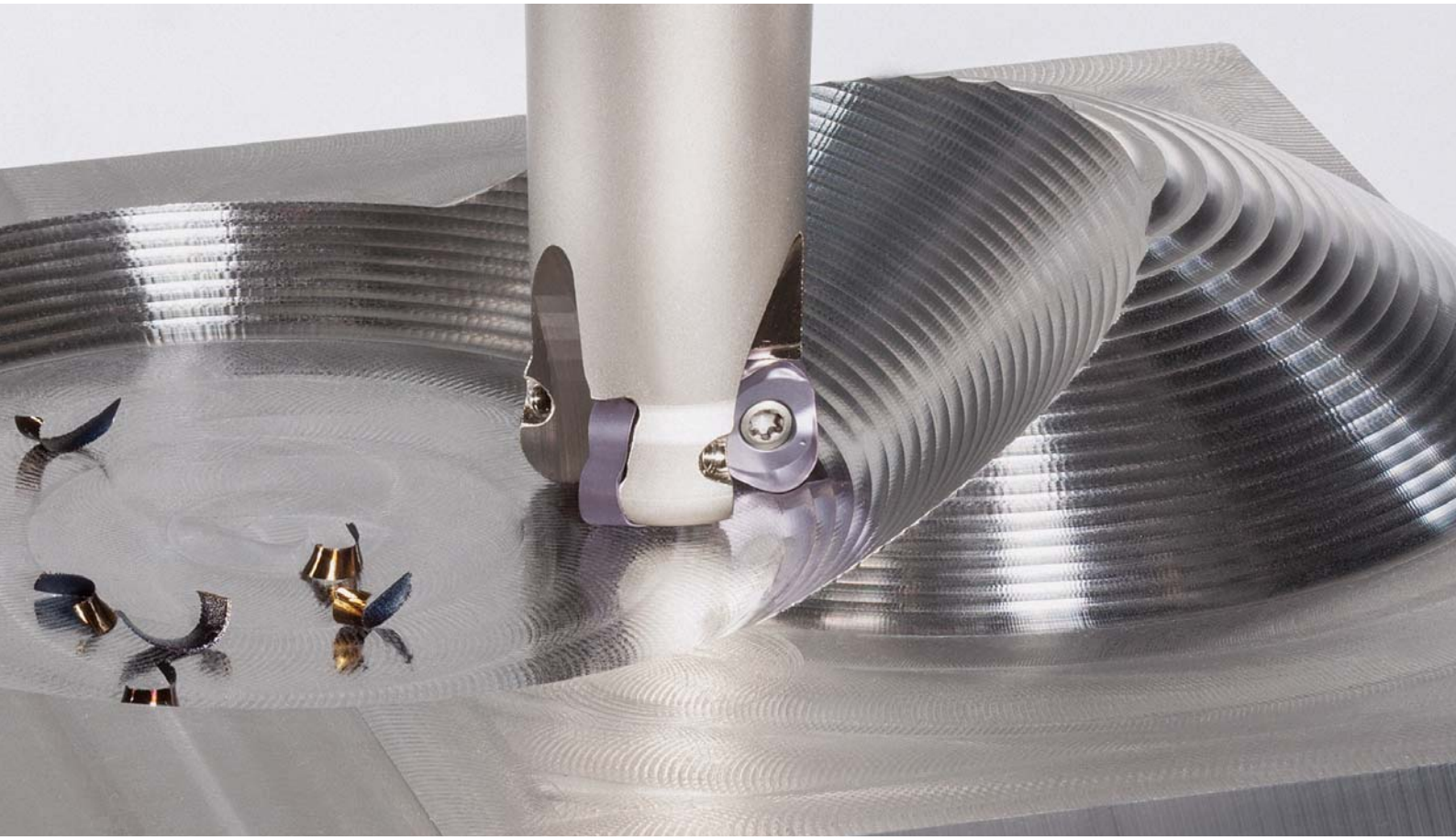

TUNGFORCE MILL
ACCELERATED MACHINING

Line up:

- Inserts:
High-feed type (**LNMX04…**and **LNMX06...HJ**): Applicable for depth of cut 1.3 and 2 mm (0.051" and 0.0787") respectively for high feed milling
Radius type (**LNMX04..R4** and **LNMX06…R6…MJ/ML**): Available in R4 (R0.157") and R6 (R0.236") corner radii for profile milling of various materials

Cutter bodies:
Shank type **EXLN**: Available in metric and inch sizes
Bore type **TXLN**: Available in metric, JIS and inch sizes
Modular type **HXLN**: Available in metric screw connection
All the designs available in coarse- and close-pitch designs

Grades:
The newest **AH3135** and the popular **AH120** suitable for machining all materials

LNMX**04**..**R4** MJ & ML
LNMX**06**..**R6** MJ & ML

LNMX**04**..HJ
LNMX**06**..HJ

CUTTER - SHANK TYPE

DoTwistBall EXLN

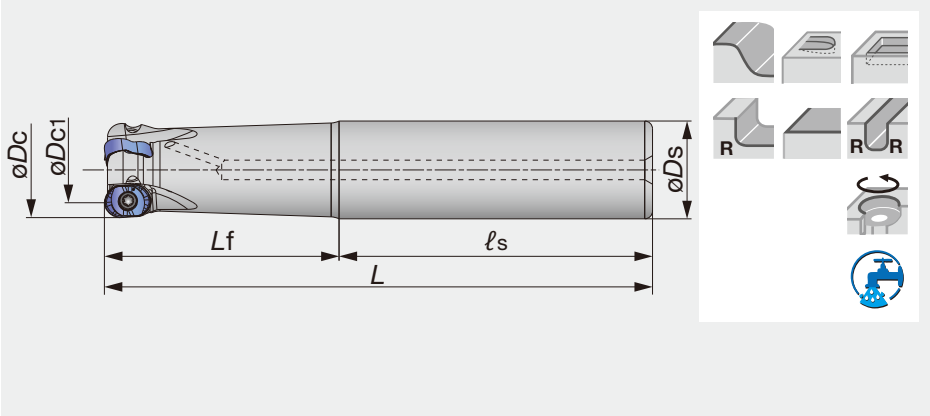

Designation	Max. ap	øDc	z	øDc1	øDs	ℓs	Lf	L	Kg	Insert
EXLN04M020C20.0R02	4	20.00	2	12.0	20.0	80.0	50.0	130.0	0.28	LNMX04**
EXLN04M025C25.0R03	4	25.00	3	17.0	25.0	80.0	60.0	140.0	0.46	LNMX04**
EXLN04M032C32.0R04	4	32.00	4	24.0	32.0	80.0	70.0	150.0	0.83	LNMX04**
EXLN04M032C32.0R05	4	32.00	5	24.0	32.0	80.0	70.0	150.0	0.83	LNMX04**
EXLN06M032C32.0R02	6	32.00	2	20.0	32.0	100.0	50.0	150.0	0.80	LNMX06**
EXLN06M040C32.0R04	6	40.00	4	28.0	32.0	100.0	50.0	150.0	0.90	LNMX06**

SPARE PARTS




Designation	Clamping screw	Wrench		Mono block type wrench
		Torx Bit	Grip	
EXLN04M***	CSPD-3	-	-	IP-10D
EXLN06M***	CSPB-5	BLDIP20/S7	H-TB2W	-

Radius cutter with double-sided insert

CUTTER - MODULAR TYPE

DoTwistBall HXLN

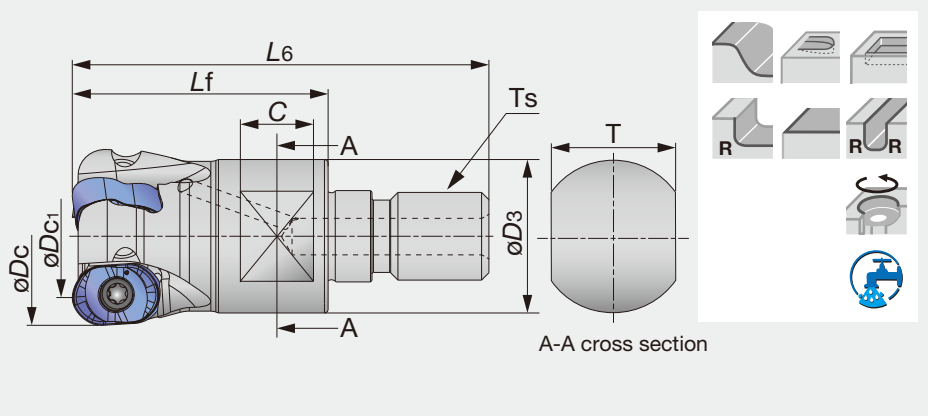

Designation	Max. ap	øDc	z	øDc1	L6	Lf	C	T	øD3	Ts	Kg	Insert
HXLN04M020M10R02	4	20.00	2	12.0	49.0	30.0	10.0	15.0	18.0	M10	0.07	LNMX04**
HXLN04M025M12R03	4	25.00	3	17.0	57.0	35.0	10.0	17.0	21.0	M12	0.16	LNMX04**
HXLN04M032M16R04	4	32.00	4	24.0	63.0	40.0	12.0	22.0	29.0	M16	0.20	LNMX04**

SPARE PARTS

Designation	Clamping screw	Mono block type wrench
HXLN04M***	CSPD-3	IP-10D

CUTTER - BORE TYPE

DoTwistBall TXLN

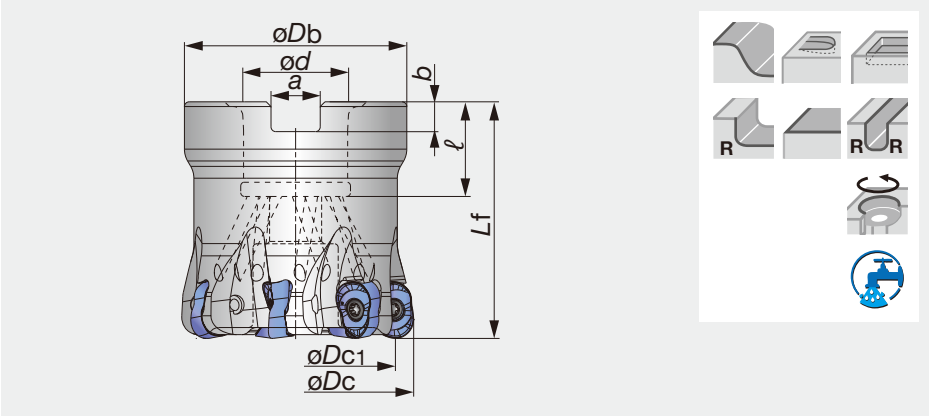

Designation	Max. ap	øDc	z	øDc1	øDb	Lf	ød	ℓ	a	b	Kg	C.bolt	Insert
TXLN04M040B16.0R06	4	40.00	6	32.0	35	40.0	16.000	18.00	8.40	5.60	0.35	FSHM8-30H	LNMX04**
TXLN04M050B22.0R07	4	50.00	7	42.0	47	50.0	22.000	20.00	10.40	6.30	0.45	CM10X30H	LNMX04**
TXLN06M050B22.0R05	6	50.00	5	38.0	47	50.0	22.000	20.00	10.40	6.30	0.50	FSHM10-40H	LNMX06**
TXLN06M052B22.0R05	6	52.00	5	40.0	49	50.0	22.000	20.00	10.40	6.30	0.50	CM10X30H	LNMX06**
TXLN06M063B22.0R06	6	63.00	6	51.0	59	50.0	22.000	20.00	10.40	6.30	0.80	CM10X30H	LNMX06**
TXLN06M066B27.0R06	6	66.00	6	54.0	62	50.0	27.000	22.00	12.40	7.00	0.80	CM12X30H	LNMX06**

SPARE PARTS

Designation	Clamping screw	Wrench		
		Torx Bit	Grip	
TXLN04M***	CSPD-3	BLD IP10/S7	SW6-SD	-
TXLN06M***	CSPB-5	BLDIP20/S7	-	H-TB2W

INSERTS

LNMX-MJ

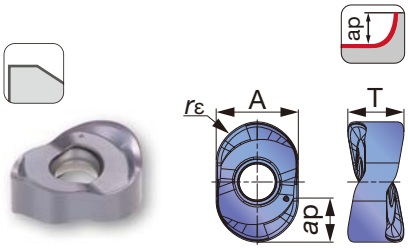

LNMX-ML

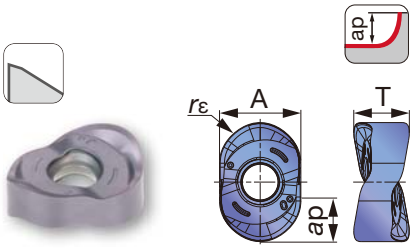

LNMX-HJ

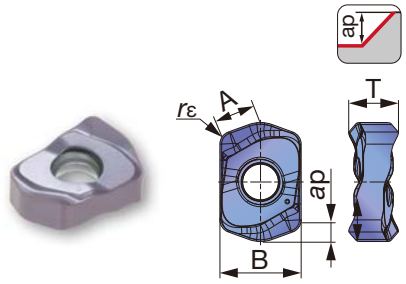

Designation	Max. *ap*	A	B	T	*rε*	AH3135				AH120			
LNMX0405R4-MJ	4	8.2	-	5.6	4	●	●		●	○		●	●
LNMX0405R4-ML	4	8.2	-	5.6	4	●	●		●	○		●	●
LNMX0405ZER-HJ	1.3	4.3	8.2	5.6	1.3	●	●		●	○		●	●
LNMX0607R6-MJ	6	12.6	-	7.6	6	●	●		●	○		●	●
LNMX0607R6-ML	6	12.6	-	7.6	6	●	●		●	○		●	●
LNMX0607ZER-HJ	2	6.4	12.6	7.6	1.5	●	●		●	○		●	●
						P	M	K	H	P	M	K	H

● First choice
Note: See page 9 for more information about grades.

STANDARD CUTTING CONDITIONS

For MJ, ML type

ISO	Workpiece materials	Hardness	Priority	Grades	Chip-breaker	Cutting speed *Vc* (m/min)	Feed per tooth *fz* (mm/t)
P	Low carbon steels C15, C20, etc.	- 300 HB	First choice	AH3135	MJ	150 - 250	0.2 - 0.6
		- 300 HB	Second choice	AH3135	ML	150 - 250	0.2 - 0.6
	Carbon steels, Alloy steels C55, 42CrMoS4, etc.	- 300 HB	First choice	AH3135	MJ	150 - 250	0.2 - 0.6
		- 300 HB	Second choice	AH3135	ML	150 - 250	0.2 - 0.6
	Prehardened steels NAK80, PX5, etc.	30 - 40 HRC	First choice	AH3135	MJ	100 - 200	0.15 - 0.4
		30 - 40 HRC	Second choice	AH3135	ML	100 - 200	0.15 - 0.4
M	Stainless steels X5CrNi18-9, X5CrNiMo17-12-2, etc	- 200 HB	First choice	AH3135	MJ	100 - 200	0.2 - 0.6
		- 200 HB	Second choice	AH3135	ML	100 - 200	0.2 - 0.6
	Stainless steels X12Cr113, X20Cr13, etc	- 200 HB	First choice	AH3135	MJ	100 - 300	0.2 - 0.6
		- 200 HB	Second choice	AH3135	ML	100 - 300	0.2 - 0.6
K	Grey cast irons 250, 300, etc.	150 - 250 HB	First choice	AH120	MJ	150 - 250	0.2 - 0.6
		150 - 250 HB	Second choice	AH120	ML	150 - 250	0.2 - 0.6
	Ductile cast irons 400-15, 600-3, etc.	150 - 250 HB	First choice	AH120	MJ	150 - 250	0.2 - 0.6
		150 - 250 HB	Second choice	AH120	ML	150 - 250	0.2 - 0.6
H	Hardened steel SKD61, etc	40 - 50 HRC	First choice	AH3135	MJ	50 - 150	0.1 - 0.3
		40 - 50 HRC	Second choice	AH3135	ML	50 - 150	0.1 - 0.3
	Hardened steel SKD11, etc	50 - 60 HRC	First choice	AH120	MJ	50 - 70	0.05 - 0.15
		50 - 60 HRC	Second choice	AH120	ML	50 - 70	0.05 - 0.15

Note: See page 9 for more information about grades.

For HJ type

ISO	Workpiece materials	Hardness	Priority	Grades	Chipbreaker	Cutting speed *Vc* (m/min)	Feed per tooth *fz* (mm/t)
P	Low carbon steels C15, C20, etc.	- 300 HB	First choice	AH3135	HJ	150-250	0.5-1.3
			Second choice	AH120	HJ	150-250	0.5-1.3
	Carbon steels, Alloy steels C55, 42CrMoS4, etc.	- 300 HB	First choice	AH3135	HJ	150-250	0.5-1.3
			Second choice	AH120	HJ	150-250	0.5-1.3
	Prehardened steels NAK80, PX5, etc.	30 - 40 HRC	First choice	AH3135	HJ	100-200	0.3-0.7
			Second choice	AH120	HJ	100-200	0.3-0.7
M	Stainless steels X5CrNi18-9, X5CrNiMo17-12-2, etc	- 200 HB	First choice	AH3135	HJ	100-200	0.3-0.7
		- 200 HB	First choice	AH3135	HJ	100-300	0.3-0.7
K	Grey cast irons 250, 300, etc.	150 - 250 HB	First choice	AH120	HJ	150-250	0.5-1.3
	Ductile cast irons 400-15, 600-3, etc.	150 - 250 HB	First choice	AH120	HJ	150-250	0.5-1.3
H	Hardened steel SKD61, etc	40 - 50 HRC	First choice	AH3135	HJ	50-150	0.1-0.5
			Second choice	AH120	HJ	50-150	0.1-0.5
	Hardened steel SKD11, etc	50 - 60 HRC	First choice	AH120	HJ	50-70	0.05-0.2

Note: See page 9 for more information about grades.
Recommended cutting conditions are just for reference in general machining.

MACHINING APPLICATIONS

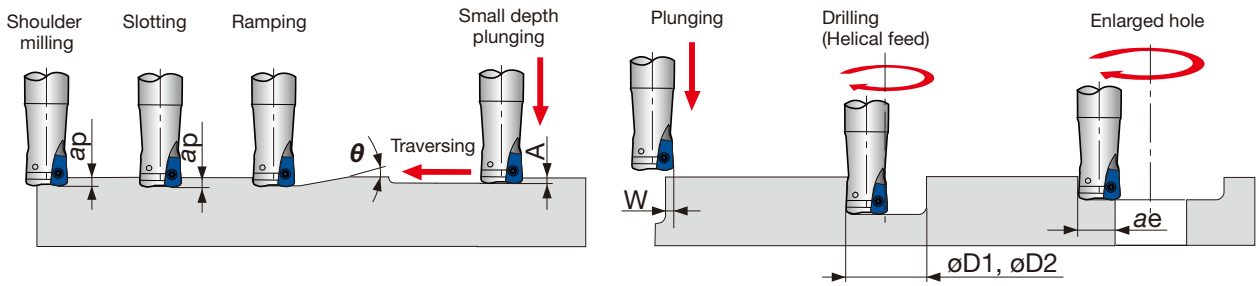

For MJ, ML type

Designation	øDc	Max. depth of cut ap	Max. ramping angle θ	Max. plunging A	Max. cutting width in plunging W	Min. machining øD1	Max. machining øD2	Max. cutting width in enlarging ae
EXLN04M020C20.0R02	20	4	4.7°	0.8	4	28	38	15
EXLN04M025C25.0R03	25	4	3°	0.8	4	38	48	20
EXLN04M032C32.0R04	32	4	2°	0.8	4	50	62	27
EXLN04M032C32.0R05	32	4	1.7°	0.7	4	50	62	27
TXLN04M040B16.0R06	40	4	1.3°	0.7	4	68	78	36
TXLN04M050B22.0R07	50	4	1°	0.7	4	88	98	46
HXLN04M020M10R02	20	4	4.7°	0.8	4	28	38	15
HXLN04M025M12R03	25	4	3°	0.8	4	38	48	20
HXLN04M032M16R04	32	4	2°	0.8	4	50	62	27

For HJ type

Designation	øDc	Max. depth of cut ap	Max. ramping angle θ	Max. plunging A	Max. cutting width in plunging W	Min. machining øD1	Max. machining øD2	Max. cutting width in enlarging ae
EXLN04M020C20.0R02	20	1.3	4.9°	0.75	4.1	27	38	15.5
EXLN04M025C25.0R03	25	1.3	3°	0.75	4.1	37	48	20.5
EXLN04M032C32.0R04	32	1.3	2°	0.75	4.1	51	62	27.5
EXLN04M032C32.0R05	32	1.3	2°	0.75	4.1	51	62	27.5
TXLN04M040B16.0R06	40	1.3	1.4°	0.75	4.1	67	78	35.5
TXLN04M050B22.0R07	50	1.3	1°	0.75	4.1	87	98	45.5
HXLN04M020M10R02	20	1.3	4.9°	0.75	4.1	27	38	15.5
HXLN04M025M12R03	25	1.3	3°	0.75	4.1	37	48	20.5
HXLN04M032M16R04	32	1.3	2°	0.75	4.1	51	62	27.5

DoMini-Mill TUNGALOY

Double-sided positive insert for semi-finishing to finishing

DoMini-Mill features the advantage of an economical 6-cornered double-sided insert with positive cutting edges for milling die & mold.

- **Highly economical insert with 6 cutting edges:**

- Twisted flank surface provides **positive flank clearance**, improving cutting performance due to large rake angle.

- Corner and rake face geometries are **optimized for machining hardened materials.**

- **Suitable for various cutting conditions** with TungFlex system:

- **Modular design** with metric threads and TungMeister threads provides flexibility in the applications of short to long overhangs.

TUNGFORCE MILL
ACCELERATED MACHINING

Line up:

WXHU04 insert available in 2 corner radii:
R0.5 mm (0.0196"): Suitable for general hard materials with low depth and width of cut
R1.0 mm (0.039"): Suitable for hardened steel due to improved corner strength

Cutter bodies:
Modular type **HFWX04**: Available in metric thread connection & TungMeister thread connection.
These modular heads can be used with TungFlex shanks or standard metric shanks or tungmeister shanks.

Grade:
AH110: Long tool life due to PremiumTec coating and wear resistant substrate

WXHU-MJ

MODULAR HEAD - METRIC THREAD

DoMini-Mill HFWX04*M**

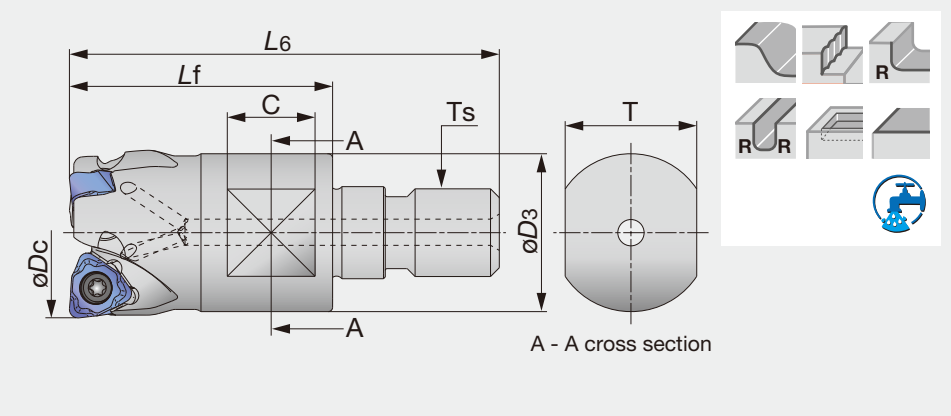

Designation	øDc	z	L6	Lf	C	T	D3	Ts	Kg	Insert
HFWX04M016M08R02	16.00	2	42.0	25.0	8.0	10.0	12.8	M8	0.03	WXHU04**
HFWX04M020M10R03	20.00	3	49.0	30.0	10.0	15.0	17.8	M10	0.05	WXHU04**
HFWX04M025M12R04	25.00	4	52.0	30.0	10.0	17.0	20.8	M12	0.09	WXHU04**

SPARE PARTS


Clamping screw	Wrench
SR34-514	T-7F

INSERTS

WXHU-MJ

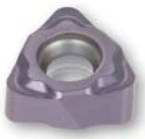


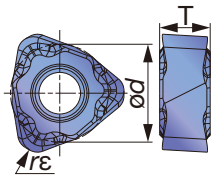

Designation	Max.* ap	IC dia	T	rε	AH110	
WXHU040305R-MJ	0.5	6.35	3.18	0.5	●	●
WXHU040310R-MJ	1	6.35	3.18	1	●	●
					P	H

* For plunging, depth up to 2 mm is possible.

● First choice

Note: See page 9 for more information about grades.

Small-radius cutter for finishing operation

MODULAR HEAD - TUNGMEISTER THREAD

DoMini-Mill HFWX04*S**

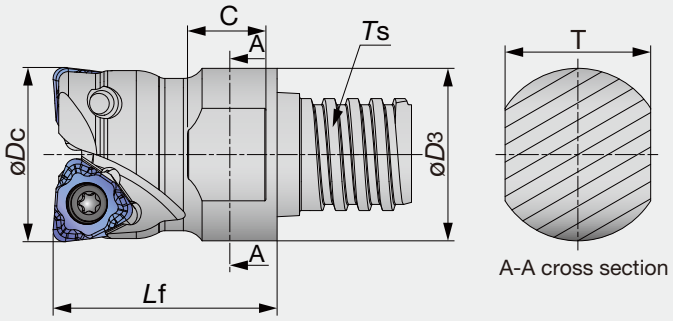

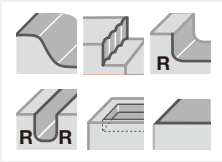

Designation	øDc	z	Lf	C	T	D3	Ts	Kg	Insert
HFWX04M016S10R02	16	2	20	7	13	15.4	S10	0.03	WXHU04**
HFWX04M020S12R03	20	3	25	7	16	18.5	S12	0.06	WXHU04**
HFWX04M025S15R04	25	4	30	7	20	24.1	S15	0.11	WXHU04**

SPARE PARTS


Clamping screw	Wrench
SR34-514	T-7F

STANDARD CUTTING CONDITIONS

ISO	Workpiece materials	Hardness (HB)	Grades	Cutting speed Vc (m/min)	Feed per tooth fz (mm/t)
P	High carbon steel (S45C / C45, S55C / C55, etc.)	200 - 300	AH110	100 - 300	0.1 - 0.3
	Alloy steel (SCM440 / 42CrMo4, SCr145, etc.)	150 - 300	AH110	100 - 300	0.1 - 0.3
	Prehardened steel (NAK80, PX5, etc.)	-	AH110	100 - 300	0.05 - 0.3
H	Hardened steel (SKD61 / X40CrMoV5-1, etc.)	-	AH110	80 - 130	0.1 - 0.3
	Hardened steel (SKD11 / X153CrMoV12, etc.)	-	AH110	50 - 100	0.05 - 0.15

BALLFINISHNOSE
TUNGALOY

Indexable insert with unique clamping system for high-precision finishing

BallFinishNose delivers excellent surface finish and stable machining due to secure clamping and minimum run-out.

- Insert in asymmetrical shape:

- Improves repeatability in indexing inserts, achieving minimum run-out and **high accuracy**

- Ball nose type and radius type of the inserts cover the machining needs in aerospace and die & mold industries.

- **High radius accuracy** on ball nose insert is perfect for high-precision 3D milling.

- Fixed screw contact surface directs clamping force to the desired direction, **securing insert clamping**.

- **Coolant delivered to the cutting edge:**

- The channel on the insert supplies ample coolant to the cutting edge in three directions.

- **Excellent chip evacuation** and cooling effect provide good surface finish and long tool life in milling hardened steel.

TUNGFORCE MILL
ACCELERATED MACHINING

Line up:

Inserts available in ød 12 to 20 mm (0.37” to 1.25”):
Ball nose type **ZFB**: Suitable for finishing and 3D milling of die & mold. Applicable for a wide range of operations.
Radius type **ZFR**: Suitable for finishing of die & mold. The cutting edge has corner radius.
MJ chipbreaker: Optimized geometry for all applications

Cutter bodies:
Steel shank **EBFM..S..S…**: Suitable for applications with short overhang
Carbide shank **EBFM..S..C…**: Suitable for applications with long overhang
Modular system **HBFM..M.. / SM..-L..C..**: Available in metric thread connection to use with the standard TungFlex shanks

Grades:
AH710: Excellent wear resistance in machining steel, cast iron, and hard materials
AH725: Suitable for steel and stainless steel


ZFB-MJ

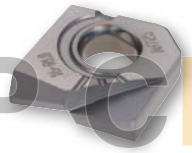
ZFR-MJ

CUTTER - STEEL SHANK

BallFinishNose EBF

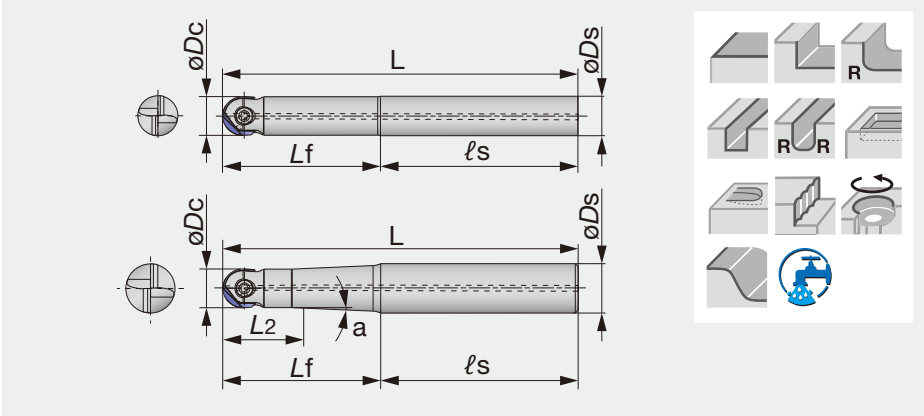

Designation	øDc	øDs	ℓs	Lf	L	L2	a	Fig.	Insert
EBFM12S12S110	12	12	80	30	110	-	-	1	ZF*M120
EBFM16T20S130	16	20	80	50	130	15.5	1.5°	2	ZF*M160
EBFM20T25S180	20	25	100	80	180	24	2.5°	2	ZF*M200

SPARE PARTS

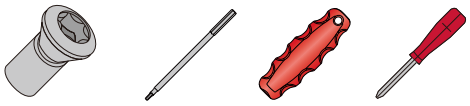

Designation	Clamping Screw	Wrench		Mono block type wrench
		Torx Bit	Grip	
EBFM12...	TS40F120A	-	-	T-15D
EBFM16...	TS50F160A	BT20S	H-TB2W	-
EBFM20...	TS60F200A	BLDT25/M7	H-TB2W	-

Indexable endmill for high precision finish.

CUTTER - CARBIDE SHANK TYPE

BallFinishNose EBF

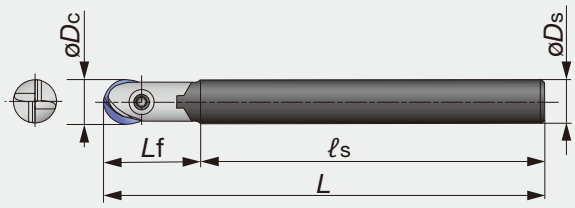

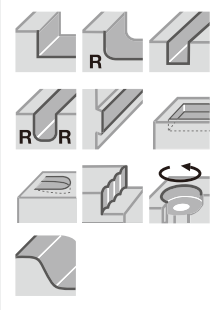

Designation	øDc	øDs	ℓs	Lf	L	Insert
EBFM12S12C160	12	12	70	90	160	ZF*M120
EBFM12S12C220	12	12	70	150	220	ZF*M120
EBFM16S16C160	16	16	80	80	160	ZF*M160
EBFM16S16C220	16	16	70	150	220	ZF*M160
EBFM20S20C220	20	20	100	120	220	ZF*M200
EBFM20S20C300	20	20	80	220	300	ZF*M200

SPARE PARTS

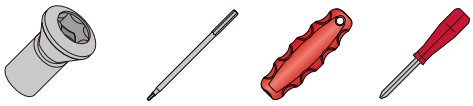

Designation	Clamping Screw	Wrench		Mono block type wrench
		Torx Bit	Grip	
EBFM12...	TS40F120A	-	-	T-15D
EBFM16...	TS50F160A	BT20S	H-TB2W	-
EBFM20...	TS60F200A	BLDT25/M7	H-TB2W	-

BALLFINISHNOSE

Indexable endmill with TungFlex threaded adaptation for high precision finish.

CUTTER - MODULAR TYPE

BallFinishNose HBF

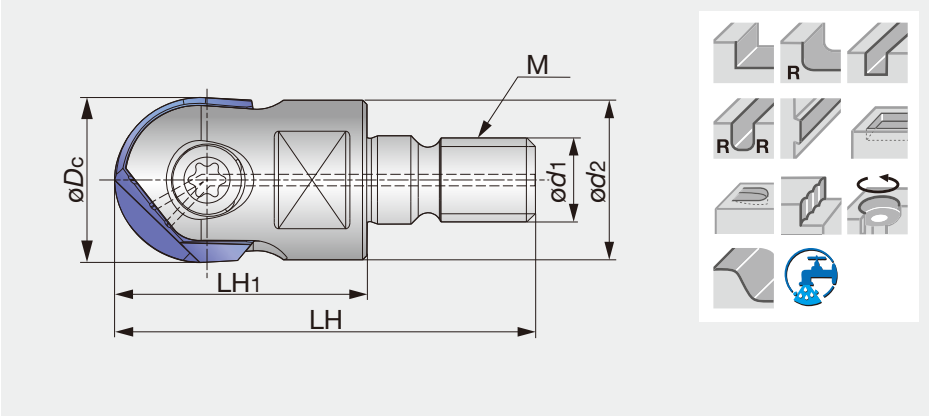

Designation	øDc	LH	LH1	ød1	ød2	M	Insert
HBFM12M06	12	37.5	23	6.5	11.5	M6	ZF*M120
HBFM12M08	12	40.5	23	8.5	13	M8	ZF*M120
HBFM16M08	16	47.5	30	8.5	13	M8	ZF*M160
HBFM20M10	20	50	30	10.5	19	M10	ZF*M200

SPARE PARTS

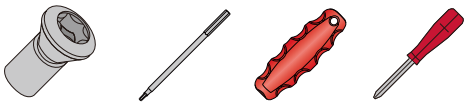

Designation	Clamping Screw	Wrench		Mono block type wrench
		Torx Bit	Grip	
HBFM12...	TS40F120A	-	-	T-15D
HBFM16...	TS50F160A	BT20S	H-TB2W	-
HBFM20...	TS60F200A	BLDT25/M7	H-TB2W	-

ENDMILLS - MODULAR SHANK

SM Tung Flex - Straight shank

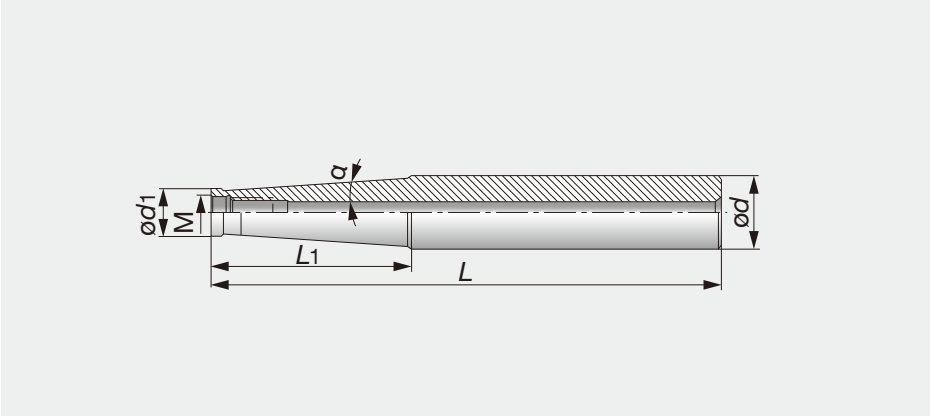

Designation	ød	L	L1	ød1	M	α	Shank type
SM06-L60C10	10	60	20.0	9.7	M6	0°	Straight
SM06-L125-C12	12	105	60.0	9.7	M6	1.2°	Straight
SM06-L125-C16	16	125	60.0	9.7	M6	3.3°	Straight
SM08-L73C16	16	73	25.0	13.0	M8	0°	Straight
SM08-L128-C16	16	128	80.0	13.0	M8	0.9°	Straight
SM08-L170-C20	20	170	66.8	13.0	M8	3.3°	Straight
SM10-L80-C20	20	80	30.0	18.0	M10	0°	Straight
SM10-L130-C20	20	130	80.0	18.0	M10	0.6°	Straight
SM10-L200-C25	25	200	57.2	19.0	M10	3.3°	Straight
SM12-L86-C25	25	86	30.0	21.0	M12	5.1°	Straight
SM12-L200-C32	32	200	78.0	21.0	M12	4.4°	Straight
SM16-L95-C32	32	95	35.0	29.0	M16	1.7°	Straight
SM16-L230-C32	32	230	50.0	29.0	M16	1.8°	Straight

INSERTS

ZFB - MJ

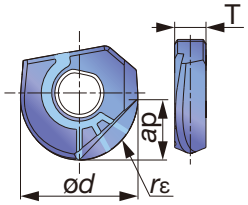

Designation	Max. ap	ød	T	rε	AH725					AH710				
ZFBM120R00-MJ	6	12	3.4	6	●	●	○	●		○		●		●
ZFBM160R00-MJ	8	16	4.4	8	●	●	○	●		○		●		●
ZFBM200R00-MJ	10	20	5.4	10	●	●	○	●		○		●		●
					P	M	K	N	H	P	M	K	N	H

● First choice
Note: See page 9 for more information about grades.

ZFR - MJ

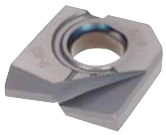

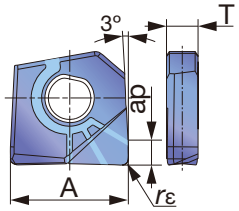

Designation	Max. ap	ød	T	rε	AH725					AH710				
ZFRM120R05-MJ	1.7	12	3.4	0.5	●	●	○	●		○		●		●
ZFRM120R10-MJ	2.2	12	3.4	1.0	●	●	○	●		○		●		●
ZFRM160R05-MJ	2.1	16	4.4	0.5	●	●	○	●		○		●		●
ZFRM160R10-MJ	2.6	16	4.4	1.0	●	●	○	●		○		●		●
ZFRM160R15-MJ	3.1	16	4.4	1.5	●	●	○	●		○		●		●
ZFRM200R10-MJ	3.0	20	5.4	1.0	●	●	○	●		○		●		●
ZFRM200R15-MJ	3.5	20	5.4	1.5	●	●	○	●		○		●		●
					P	M	K	N	H	P	M	K	N	H

● First choice
Note: See page 9 for more information about grades.

STANDARD CUTTING CONDITIONS

ISO	Workpiece materials	Hardness	Selection criteria	Grades	Max.axial depth of cut (mm)	Cutting speed *Vc* (m/min)	Feed per tooth : *fz* (mm/t)		
							D12	D16	D20
P	Low carbon steel, alloy steel	85 - 180 HB	First choice	AH725	≤ 0.04D	180 - 260	0.20	0.25	0.25
		85 - 180 HB	For wear resistance	AH710	≤ 0.04D	180 - 260	0.20	0.25	0.25
	High carbon steel, alloy steel	180 - 280 HB	First choice	AH725	≤ 0.03D	150 - 230	0.20	0.25	0.25
		180 - 280 HB	For wear resistance	AH710	≤ 0.03D	180 - 230	0.20	0.25	0.25
	Prehardened steel Die & mold tool steel	HRC 40 - 48	First choice	AH710	≤ 0.03D	180 - 300	0.20	0.20	0.25
		HRC 40 - 48	For fracture resistance	AH725	≤ 0.03D	180 - 300	0.20	0.20	0.25
M	Stainless steel	135 - 200 HB	First choice	AH725	≤ 0.03D	100 - 250	0.20	0.20	0.25
K	Cast iron	150 - 240 HB	First choice	AH710	≤ 0.04D	90 - 350	0.25	0.30	0.30
		150 - 240 HB	For fracture resistance	AH725	≤ 0.04D	90 - 350	0.25	0.30	0.30
N	Aluminium	-	First choice	AH725	≤ 0.03D	200 - 400	0.35	0.35	0.35
H	High hardened steel	HRC 48 - 65	First choice	AH710	≤ 0.02D	100 - 350	0.10	0.13	0.15

Note: See page 9 for more information about grades.
· Remove excessive chip accumulation with an air blast.
· For the operation with depth of cut which varies (ex.casting skin) and machining of workpiece materials with interrupted surface, the feed per tooth (*fz*) should be set to the lower recommended value shown in the above table.
· Cutting conditions maybe limited depending on machine power, workpiece rigidity, and spindle output. When the cutting width, depth, or overhang length is large, set *Vc* and *fz* to the lower recommended values and check the machine power and vibration.

How to clamp the insert

1. Clear chips and dust from the pocket.
2. Place the insert in the pocket. The insert can be placed only in one direction.
3. Tighten the screw while pressing the insert into the pocket.

How to check the run-out

1. Clamp the insert on the shank.
2. Clamp the shank on a high-precision arbor.
3. Measure the run-out on tool presetter or by dial gauge.

Notes:
1. Due to the helical cutting edge, it is important that the run-out is inspected with the insert clamped on the shank.
2. Do not use micrometer or caliper to inspect the insert diameter as inaccurate dimensions may be provided.

Turning application for difficult-to-cut materials poses a challenge in chip control and tool life. Achieving the best performance with high productivity while maintaining long tool life is accomplished by coordinated research in the **Grade** technology and the insert **Geometry**. Tungaloy introduces the **TunGForce TurnLine** with the advanced design of the **Grades** and the **Geometries** to accomplish **Accelerated Machining**.

TurnLine

MINIFORCE TURN
TUNGALOY

Economical double-sided insert with sharp cutting edges

MiniForce-Turn's innovative insert with multiple cutting edges clamped into uniquely designed pocket in dovetail structure provides the highest insert stability during the operation.

- **Double-sided insert** with positive cutting edges:
- Cutting performance equal to that of the conventional positive inserts
- Available with **4 or 6 cutting edges** for the reduction in tool cost
- Same insert applicable for both **Bore Line** and **External Line**:
- Bore Line: Minimum diameter of ø12 mm (0.5")
- External Line: Great for small-part machining on automatic lathes
- **Ground insert for highly accurate machining**

TUNGFORCE TURN
ACCELERATED MACHINING

Line up:

Inserts available in 3 types:
WXGU: 80° corner angle with 6 cutting edges
DXGU: 55° corner angle with 4 cutting edges
VXGU: 35° corner angle with 4 cutting edges

Tools in a wide variety suit small machines for many applications.

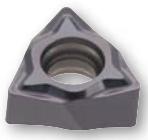
WXGU


DXGU


VXGU

Screw-on toolholder without offset with 95deg approach angle, for WXGU inserts

TOOLHOLDERS - FOR EXTERNAL TURNING AND FACING

MiniForce-Turn JSWL2XR/L

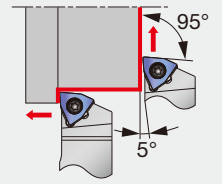

Cutting edge style **L2**

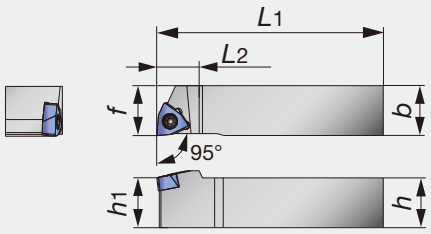

Right hand (R) shown.

Designation	h	b	L1	L2	h1	f	rε	Insert	Torque*
JSWL2XR/L1010X04	10	10	120	11	10	10	0.2	WXGU0403**L/R	0.9
JSWL2XR/L1212F04	12	12	85	11	12	12	0.2	WXGU0403**L/R	0.9
JSWL2XR/L1212X04	12	12	120	11	12	12	0.2	WXGU0403**L/R	0.9
JSWL2XR/L1616X04	16	16	120	13	16	16	0.2	WXGU0403**L/R	0.9
JSWL2XR/L2020H04	20	20	100	13	20	20	0.2	WXGU0403**L/R	0.9

Note: Right-hand toolholders (R) are used with left-hand inserts (L)
Left-hand toolholders (L) are used with right-hand inserts (R)

*Torque: Recommended torque (Nm) for clamping

SPARE PARTS

Designation	Clamping screw	Wrench
JSWL2XR/L...	SR34-514	T-7F

Side clamp toolholder without offset with 95deg approach angle, for WXGU inserts

TOOLHOLDERS - FOR EXTERNAL TURNING AND FACING

MiniForce-Turn JPWL2XR/L

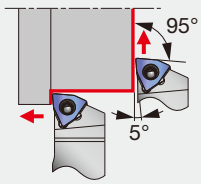

Cutting edge style **L2**

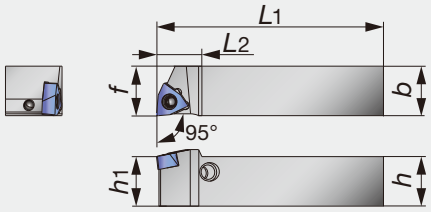

Right hand (R) shown.

Designation	h	b	L1	L2	h1	f	rε	Insert	Torque*
JPWL2XR/L1010X04	10	10	120	11	10	10	0.2	WXGU0403**L/R	0.9
JPWL2XR/L1212F04	12	12	85	11	12	12	0.2	WXGU0403**L/R	0.9
JPWL2XR/L1212X04	12	12	120	11	12	12	0.2	WXGU0403**L/R	0.9
JPWL2XR/L1616X04	16	16	120	13	16	16	0.2	WXGU0403**L/R	0.9

Note: Right-hand toolholders (R) are used with left-hand inserts (L)
Left-hand toolholders (L) are used with right-hand inserts (R)

*Torque: Recommended torque (Nm) for clamping

SPARE PARTS

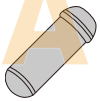

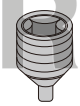

Designation	Lever	Pin	Clamping screw	Wrench
JPWL2XR/L...	SLLV-2	SL-PI-2	SR10400611	HW 2.0/5 RED

Screw-on stepped-head toolholder with 95 deg approach angle, for WXGU inserts

TOOLHOLDERS - FOR EXTERNAL TURNING AND FACING

MiniForce-Turn JSWLXR-F

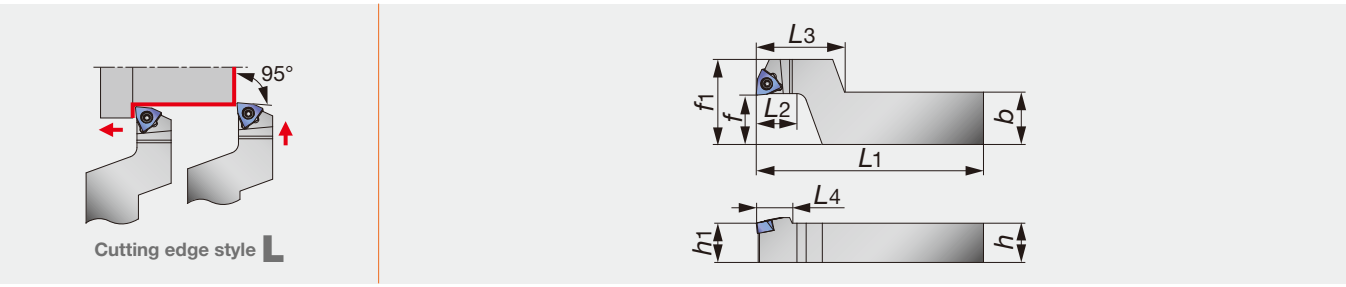

Right hand (R) shown.

Designation	h	b	L1	L2	L3	L4	h1	f	f1	rε	Insert	Torque*
JSWLXR1016X04-F15	10	16	120	12	27	11	10	15	26	0.2	WXGU0403**L	0.9
JSWLXR1216F04-F15	12	16	85	12	27	11	12	15	26	0.2	WXGU0403**L	0.9
JSWLXR1216X04-F15	12	16	120	12	27	11	12	15	26	0.2	WXGU0403**L	0.9
JSWLXR1620X04-F15	16	20	120	12	27	11	16	15	26	0.2	WXGU0403**L	0.9

Note: Right-hand toolholders (R) are used with left-hand inserts (L)

*Torque: Recommended torque (Nm) for clamping

SPARE PARTS

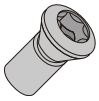

Designation	Clamping screw	Wrench
JSWLXR...-F15	SR34-514	T-7F

Screw-on toolholder without offset with 95deg approach angle, for WXGU inserts, with channels for high pressure coolant.

TOOLHOLDERS - FOR EXTERNAL TURNING AND FACING

MiniForce-Turn JSWL2XR/L-CHP

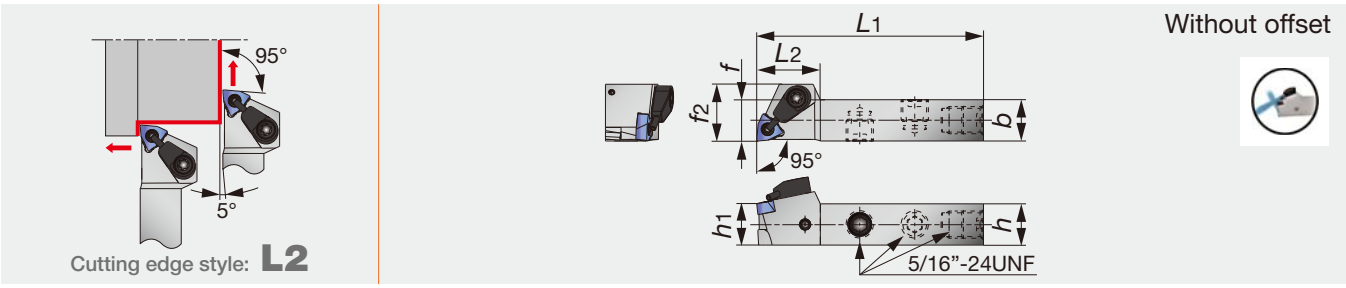

Right hand (R) shown.

Designation	h	b	L1	L2	h1	f	f2	rε	Insert	Torque*
JSWL2XR/L1212F04-CHP	12	12	85	18	12	12	16.5	0.2	WXGU0403**L/R	0.9

Note: Right-hand toolholders (R) are used with left-hand inserts (L)
Left-hand toolholders (L) are used with right-hand inserts (R)

*Torque: Recommended torque (Nm) for clamping

SPARE PARTS

Designation	Clamping screw	Wrench	Coolant unit
JSWL2XR/L1212F04-CHP	SR34-514	T-7F	S-CU-CHP

Screw-on toolholder without offset with 93deg approach angle, for DXGU inserts

TOOLHOLDERS - FOR EXTERNAL TURNING AND PROFILING

MiniForce-Turn JSDJ2XR/L

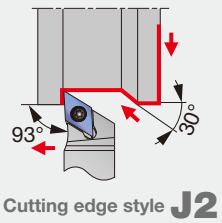

Cutting edge style **J2**

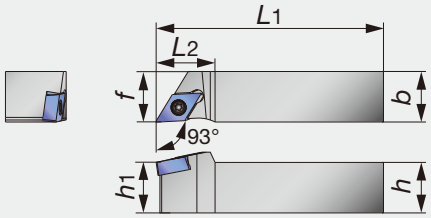

Right hand (R) shown.

Designation	h	b	L1	L2	h1	f	rε	Insert	Torque*
JSDJ2XR/L1010X07	10	10	120	14	10	10	0.2	DXGU0703**L/R	0.9
JSDJ2XR/L1212F07	12	12	85	14	12	12	0.2	DXGU0703**L/R	0.9
JSDJ2XR/L1212X07	12	12	120	14	12	12	0.2	DXGU0703**L/R	0.9
JSDJ2XR/L1616X07	16	16	120	18	16	16	0.2	DXGU0703**L/R	0.9
JSDJ2XR/L2020H07	20	20	100	18	20	20	0.2	DXGU0703**L/R	0.9

Note: Right-hand toolholders (R) are used with left-hand inserts (L)
Left-hand toolholders (L) are used with right-hand inserts (R)

*Torque: Recommended torque (Nm) for clamping

SPARE PARTS

Designation	Clamping screw	Wrench
JSDJ2XR/L...	SR34-514	T-7F

Side clamp toolholder without offset with 93deg approach angle, for DXGU inserts

TOOLHOLDERS - FOR EXTERNAL TURNING AND PROFILING

MiniForce-Turn JPDJ2XR/L

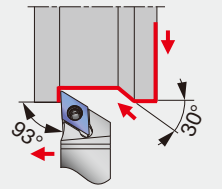

Cutting edge style **J2**

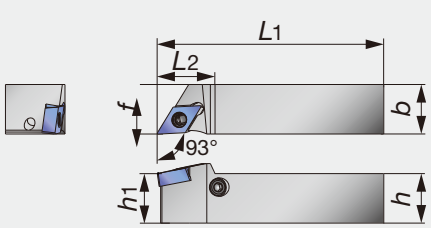

Right hand (R) shown.

Designation	h	b	L1	L2	h1	f	rε	Insert	Torque*
JPDJ2XR/L1010X07	10	10	120	14	10	10	0.2	DXGU0703**L/R	0.9
JPDJ2XR/L1212F07	12	12	85	14	12	12	0.2	DXGU0703**L/R	0.9
JPDJ2XR/L1212X07	12	12	120	14	12	12	0.2	DXGU0703**L/R	0.9
JPDJ2XR/L1616X07	16	16	120	18	16	16	0.2	DXGU0703**L/R	0.9

Note: Right-hand toolholders (R) are used with left-hand inserts (L)
Left-hand toolholders (L) are used with right-hand inserts (R)

*Torque: Recommended torque (Nm) for clamping

SPARE PARTS

Designation	Lever	Pin	Clamping screw	Wrench
JPDJ2XR/L...	SLLV-2	SL-PI-2	SR10400611	HW 2.0/5 RED

Screw-on stepped-head toolholder with 93 deg approach angle, for DXGU inserts

TOOLHOLDERS - FOR EXTERNAL TURNING AND PROFILING

MiniForce-Turn JSDJXR-F

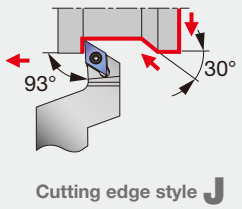

Cutting edge style J

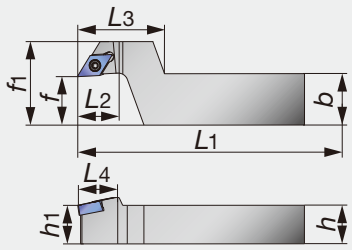

Right hand (R) shown.

Designation	h	b	L1	L2	L3	L4	h1	f	f1	rε	Insert	Torque*
JSDJXR1016X07-F15	10	16	120	12	27	14	10	15	26	0.2	DXGU0703**L	0.9
JSDJXR1216F07-F15	12	16	85	12	27	14	12	15	26	0.2	DXGU0703**L	0.9
JSDJXR1216X07-F15	12	16	120	12	27	14	12	15	26	0.2	DXGU0703**L	0.9
JSDJXR1620X07-F15	16	20	120	12	27	14	16	15	26	0.2	DXGU0703**L	0.9

Note: Right-hand toolholders (R) are used with left-hand inserts (L)

*Torque: Recommended torque (Nm) for clamping

SPARE PARTS

Designation	Clamping screw	Wrench
JSDJXR...-F15	SR34-514	T-7F

Screw-on toolholder without offset with 93deg approach angle, for WXGU inserts, with channels for high pressure coolant.

TOOLHOLDERS - FOR EXTERNAL TURNING AND PROFILING

MiniForce-Turn JSDJ2XR/L-CHP

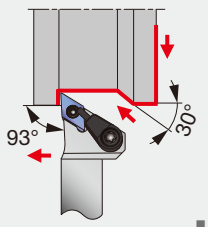

Cutting edge style: J2

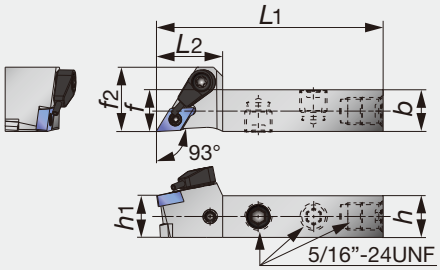

Without offset

Right hand (R) shown.

Designation	h	b	L1	L2	h1	f	f2	rε	Insert	Torque*
JSDJ2XR/L1212F07-CHP	12	12	85	19	12	12	18.5	0.2	DXGU0703**L/R	0.9

Note: Right-hand toolholders (R) are used with left-hand inserts (L)
Left-hand toolholders (L) are used with right-hand inserts (R)

*Torque: Recommended torque (Nm) for clamping

SPARE PARTS

Designation	Clamping screw	Wrench	Coolant unit
JSDJ2XR/L1212F07-CHP	SR34-514	T-7F	S-CU-CHP

Screw-on toolholder without offset with 93deg approach angle, for VXGU inserts

TOOLHOLDERS - FOR EXTERNAL TURNING AND PROFILING

MiniForce-Turn JSVJ2XR/L

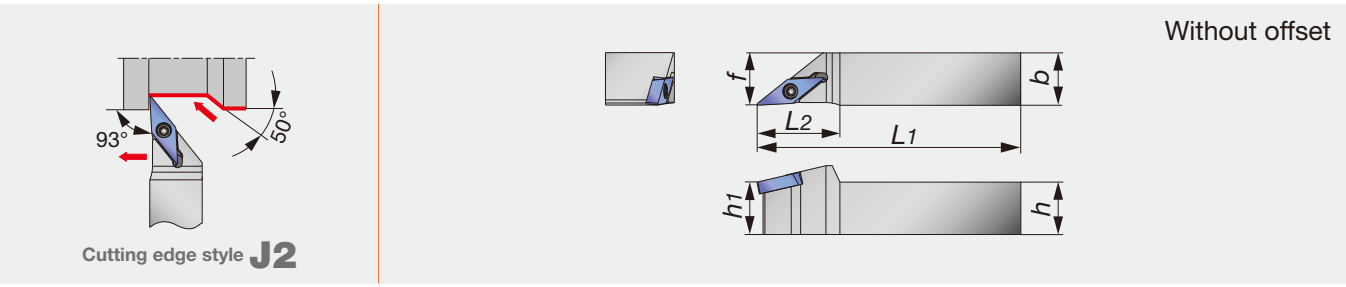

Right hand (R) shown.

Designation	h	b	L1	L2	h1	f	rε	Insert	Torque*
JSVJ2XR/L1010X09	10	10	120	17	10	10	0.2	VXGU09T2**L/R	0.9
JSVJ2XR/L1212F09	12	12	85	19	12	12	0.2	VXGU09T2**L/R	0.9
JSVJ2XR/L1212X09	12	12	120	19	12	12	0.2	VXGU09T2**L/R	0.9
JSVJ2XR/L1616X09	16	16	120	19	16	16	0.2	VXGU09T2**L/R	0.9
JSVJ2XR/L2020H09	20	20	100	19	20	20	0.2	VXGU09T2**L/R	0.9

Note: Right-hand toolholders (R) are used with left-hand inserts (L)
Left-hand toolholders (L) are used with right-hand inserts (R)

*Torque: Recommended torque (Nm) for clamping

SPARE PARTS

Designation	Clamping screw	Wrench
JSVJ2XR/L...	SR34-508	T-7F

Side clamp toolholder without offset with 93deg approach angle, for VXGU inserts

TOOLHOLDERS - FOR EXTERNAL TURNING AND PROFILING

MiniForce-Turn JPVJ2XR/L

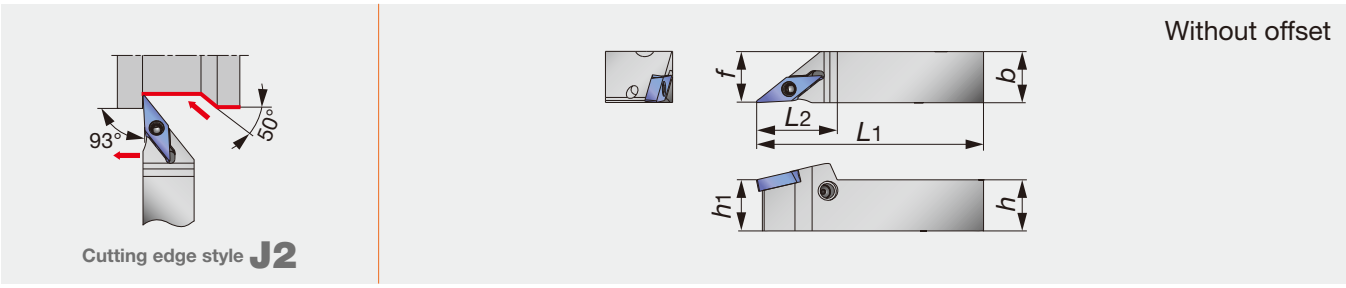

Right hand (R) shown.

Designation	h	b	L1	L2	h1	f	rε	Insert	Torque*
JPVJ2XR/L1010X09	10	10	120	19	10	10	0.2	VXGU09T2**L/R	0.9
JPVJ2XR/L1212F09	12	12	85	19	12	12	0.2	VXGU09T2**L/R	0.9
JPVJ2XR/L1212X09	12	12	120	19	12	12	0.2	VXGU09T2**L/R	0.9
JPVJ2XR/L1616X09	16	16	120	19	16	16	0.2	VXGU09T2**L/R	0.9

Note: Right-hand toolholders (R) are used with left-hand inserts (L)
Left-hand toolholders (L) are used with right-hand inserts (R)

*Torque: Recommended torque (Nm) for clamping

SPARE PARTS

Designation	Lever	Pin	Clamping screw	Wrench
JPVJ2XR/L...	SLLV-1	SL-PI-2	SR 10400611	HW 2.0/5 RED

Screw-on stepped-head toolholder with 93 deg approach angle, for VXGU inserts

TOOLHOLDERS - FOR EXTERNAL TURNING AND PROFILING

MiniForce-Turn JSVJXR-F

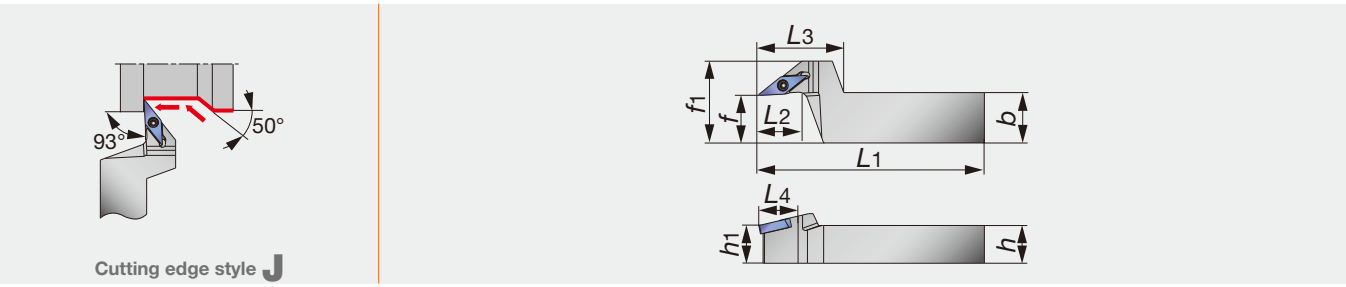

Right hand (R) shown.

Designation	h	b	L1	L2	L3	L4	h1	f	f1	rε	Insert	Torque*
JSVJXR1016X09-F15	10	16	120	12	27	19	10	15	26	0.2	VXGU09T2**L	0.9
JSVJXR1216F09-F15	12	16	85	12	27	19	12	15	26	0.2	VXGU09T2**L	0.9
JSVJXR1216X09-F15	12	16	120	12	27	19	12	15	26	0.2	VXGU09T2**L	0.9
JSVJXR1620X09-F15	16	20	120	12	27	19	16	15	26	0.2	VXGU09T2**L	0.9

Note: Right-hand toolholders (R) are used with left-hand inserts (L)

*Torque: Recommended torque (Nm) for clamping

SPARE PARTS

Designation	Clamping screw	Wrench
JSVJXR...-F15	SR34-508	T-7F

Screw-on toolholder without offset with 93deg approach angle, for VXGU inserts, with coolant nozle for high pressure

TOOLHOLDERS - FOR EXTERNAL TURNING AND PROFILING

MiniForce-Turn JSVJ2XR/L-CHP

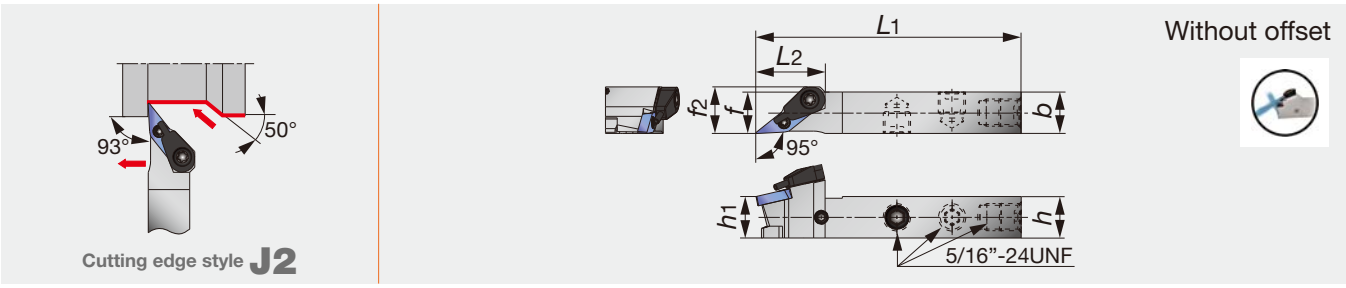

Right hand (R) shown.

Designation	h	b	L1	L2	h1	f	f2	rε	Insert	Torque*
JSVJ2XR/L1212F09-CHP	12	12	85	17.5	12	12	13.5	0.2	VXGU09T2**L/R	0.9

Note: Right-hand toolholders (R) are used with left-hand inserts (L)
Left-hand toolholders (L) are used with right-hand inserts (R)

*Torque: Recommended torque (Nm) for clamping

SPARE PARTS

Designation	Clamping screw	Wrench	Coolant unit
JSVJ2XR/L1212F09-CHP	SR34-508	T-7F	S-CU-CHP

Screw-on toolholder with 93 deg approach angle, for 55deg rhombic insert with 4 edges

TOOLHOLDERS - FOR EXTERNAL TURNING AND PROFILING

MiniForce-Turn JS-SDUXL

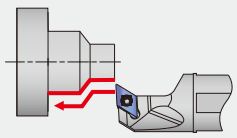

Cutting edge style U

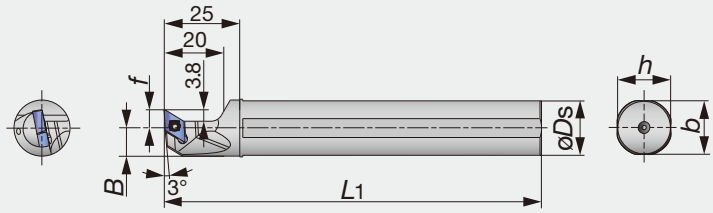

Left-hand (L) shown.

Designation	øDs	f	L1	h/b	B	rε	Insert	Torque*
JS14H-SDUXL07	14	6	100	13	6.75	0.2	DXGU0703**L	0.9
JS159F-SDUXL07	15.875	6	85	15	7.687	0.2	DXGU0703**L	0.9
JS16F-SDUXL07	16	6	85	15	7.75	0.2	DXGU0703**L	0.9
JS19G-SDUXL07	19.05	6	90	18	9.275	0.2	DXGU0703**L	0.9
JS19X-SDUXL07	19.05	6	120	18	9.275	0.2	DXGU0703**L	0.9
JS20G-SDUXL07	20	6	90	19	9.75	0.2	DXGU0703**L	0.9
JS20X-SDUXL07	20	6	120	19	9.75	0.2	DXGU0703**L	0.9
JS22X-SDUXL07	22.0	10	120	21	10.75	0.2	DXGU0703**L	0.9
JS25H-SDUXL07	25.0	10	100	24	12.25	0.2	DXGU0703**L	0.9
JS254X-SDUXL07	25.4	10	120	24	12.45	0.2	DXGU0703**L	0.9

Note: Left-hand toolholders (L) are used with left-hand inserts (L)

*Torque: Recommended torque (Nm) for clamping

SPARE PARTS

Designation	Clamping screw	Wrench
JS...-SDUXL07	SR34-514	T-7F

Screw-on toolholder with 93 deg approach angle, for VXGU inserts with 4 edges

TOOLHOLDERS - FOR EXTERNAL TURNING AND PROFILING

MiniForce-Turn JS-SVUXL

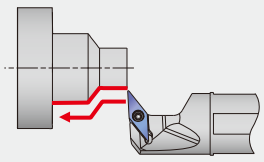

Cutting edge style U

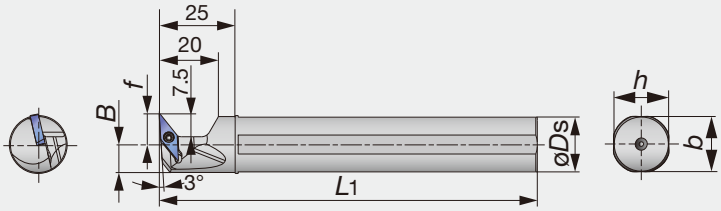

Left-hand (L) shown.

Designation	øDs	f	L1	h/b	B	rε	Insert	Torque*
JS159F-SVUXL09	15.875	10	85	15	7.7	0.2	VXGU09T2**L	0.9
JS16F-SVUXL09	16	10	85	15	7.7	0.2	VXGU09T2**L	0.9
JS19G-SVUXL09	19.05	10	90	18	9.2	0.2	VXGU09T2**L	0.9
JS19X-SVUXL09	19.05	10	120	18	9.2	0.2	VXGU09T2**L	0.9
JS20G-SVUXL09	20	10	90	19	9.7	0.2	VXGU09T2**L	0.9
JS20X-SVUXL09	20	10	120	19	9.7	0.2	VXGU09T2**L	0.9
JS22X-SVUXL09	22	10	120	21	10.7	0.2	VXGU09T2**L	0.9
JS25H-SVUXL09	25	10	100	24	12.2	0.2	VXGU09T2**L	0.9
JS254X-SVUXL09	25.4	10	120	24	12.4	0.2	VXGU09T2**L	0.9

Note: Left-hand toolholders (L) are used with left-hand inserts (L)

*Torque: Recommended torque (Nm) for clamping

SPARE PARTS

Designation	Clamping screw	Wrench
JS...-SVUXL09	SR34-508	T-7F

TOOLHOLDERS - FOR BORING & INTERNAL FACING

MiniForce-Turn A/E-SWLXR/L

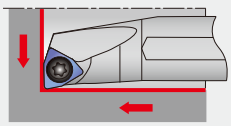

Cutting edge style L

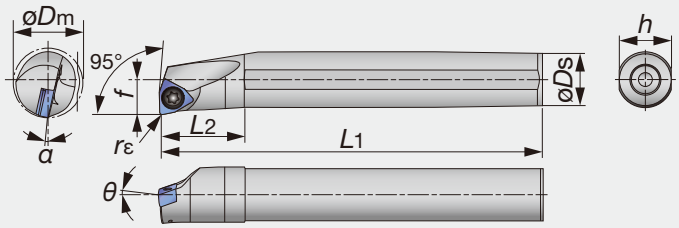

Right hand (R) shown.

Steel shank

Designation	øDm	øDs	f	L1	L2	h	f2	θ	α	rε	Insert	Torque*
A10K-SWLXR/L04-D120	12	10	6	125	20	9	-	-10°	-16°	0.4	WXGU0403**L/R	0.9
A12M-SWLXR/L04-D140	14	12	7	150	24	11	-	-10°	-14°	0.4	WXGU0403**L/R	0.9
A16Q-SWLXR/L04-D180	18	16	9	180	32	15	-	-10°	-11°	0.4	WXGU0403**L/R	0.9
A20R-SWLXR/L04-D220	22	20	11	200	36	18	-	-10°	-10°	0.4	WXGU0403**L/R	0.9

Note: Right hand toolholders (R) are used with left hand inserts (L)
Left hand toolholders (L) are used with right hand inserts (R)

*Torque: Recommended torque (Nm) for clamping

SPARE PARTS

Designation	Clamping screw	Wrench
A***-SWLXR/L...	SR34-514	T-7F

Carbide shank

Designation	øDm	øDs	f	L1	L2	h	f2	θ	α	rε	Insert	Torque*
E10M-SWLXR/L04-D120	12	10	6	150	25	9	-	-10°	-16°	0.4	WXGU0403**L/R	0.9
E12Q-SWLXR/L04-D140	14	12	7	180	27	11	-	-10°	-14°	0.4	WXGU0403**L/R	0.9
E16R-SWLXR/L04-D180	18	16	9	200	32	15	-	-10°	-11°	0.4	WXGU0403**L/R	0.9
E20S-SWLXR/L04-D220	22	20	11	250	36	18	-	-10°	-10°	0.4	WXGU0403**L/R	0.9

Note: Right hand toolholders (R) are used with left hand inserts (L)
Left hand toolholders (L) are used with right hand inserts (R)

*Torque: Recommended torque (Nm) for clamping

SPARE PARTS

Designation	Clamping screw	Wrench
E***-SWLXR/L...	SR34-514	T-7F

For 55deg rhombic insert with 4 edges

TOOLHOLDERS - FOR BORING & INTERNAL PROFILING

MiniForce-Turn A/E-SDXXR/L

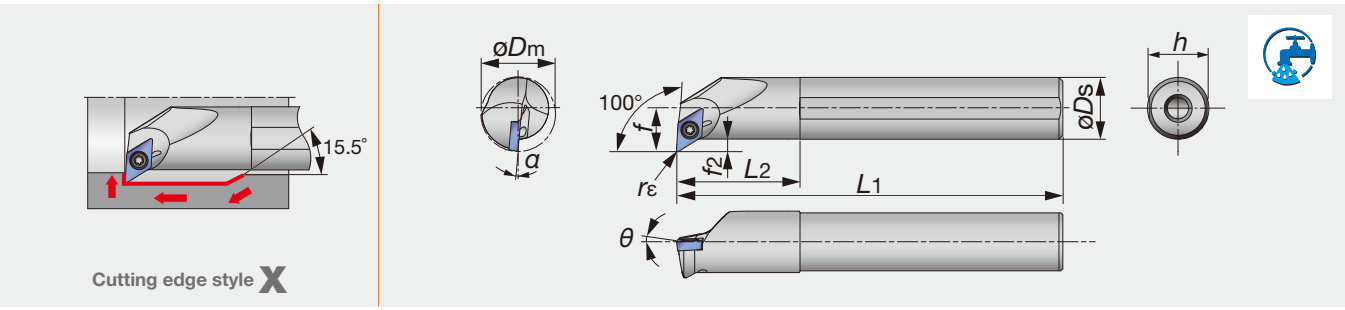

Right hand (R) shown.

Steel shank

Designation	øDm	øDs	f	L1	L2	h	f2	θ	α	rε	Insert	Torque*
A10K-SDXXR/L07-D130	13	10	7.6	125	20	9	2.6	-14°	-16°	0.4	DXGU0703**L/R	0.9
A12M-SDXXR/L07-D160	16	12	8.6	150	24	11	2.6	-14°	-14°	0.4	DXGU0703**L/R	0.9
A16Q-SDXXR/L07-D200	20	16	10.6	180	32	15	2.6	-13°	-13°	0.4	DXGU0703**L/R	0.9
A20R-SDXXR/L07-D240	24	20	12.6	200	36	18	2.6	-13°	-12°	0.4	DXGU0703**L/R	0.9

Note: Right hand toolholders (R) are used with left hand inserts (L)
Left hand toolholders (L) are used with right hand inserts (R)

*Torque: Recommended torque (Nm) for clamping

SPARE PARTS

Designation	Clamping screw	Wrench
A***-SDXXR/L...	SR34-514	T-7F

Carbide shank

Designation	øDm	øDs	f	L1	L2	h	f2	θ	α	rε	Insert	Torque*
E10M-SDXXR/L07-D130	13	10	7.6	150	25	9	2.6	-14°	-16°	0.4	DXGU0703**L/R	0.9
E12Q-SDXXR/L07-D160	16	12	8.6	180	27	11	2.6	-14°	-14°	0.4	DXGU0703**L/R	0.9
E16R-SDXXR/L07-D200	20	16	10.6	200	32	15	2.6	-13°	-13°	0.4	DXGU0703**L/R	0.9
E20S-SDXXR/L07-D240	24	20	12.6	250	36	18	2.6	-13°	-12°	0.4	DXGU0703**L/R	0.9

Note: Right hand toolholders (R) are used with left hand inserts (L)
Left hand toolholders (L) are used with right hand inserts (R)

*Torque: Recommended torque (Nm) for clamping

SPARE PARTS

Designation	Clamping screw	Wrench
E***-SDXXR/L...	SR34-514	T-7F

For 55deg rhombic insert with 4 edges

TOOLHOLDERS - FOR BACK BORING

MiniForce-Turn A/E-SDZXR/L

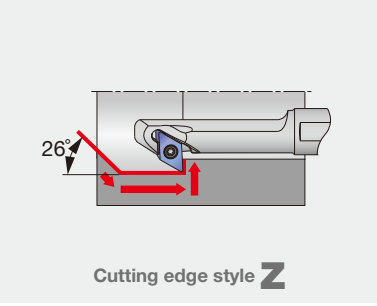

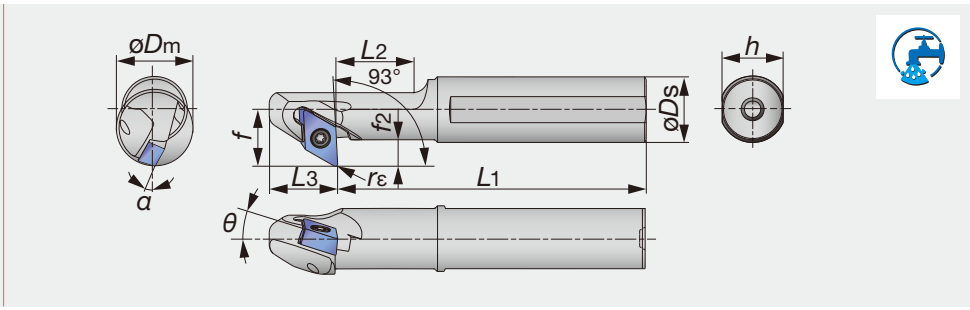

Right hand (R) shown.

Steel shank

Designation	øDm	øDs	f	L1	L2	L3	h	f2	θ	α	rε	Insert	Torque*
A12M-SDZXR/L07-D140	14	12	11	150	30	13	11	4.5	-10°	-14°	0.4	DXGU0703**R/L	0.9
A16Q-SDZXR/L07-D160	16	16	13	180	35	13	15	4.5	-10°	-12.5°	0.4	DXGU0703**R/L	0.9
A20R-SDZXR/L07-D200	20	20	15	200	40	13	18	4.5	-10°	-10.5°	0.4	DXGU0703**R/L	0.9

Note: Right hand toolholders (R) are used with right hand inserts (R)
Left hand toolholders (L) are used with left hand inserts (L)

*Torque: Recommended torque (Nm) for clamping

SPARE PARTS

Designation	Clamping screw	Wrench
A***-SDZXR/L...	SR34-514	T-7F

Carbide shank

Designation	øDm	øDs	f	L1	L2	L3	h	f2	θ	α	rε	Insert	Torque*
E12Q-SDZXR/L07-D180	18	12	11	180	-	13	11	4.5	-11°	-11°	0.4	DXGU0703**R/L	0.9
E16R-SDZXR/L07-D220	22	16	13	200	-	13	15	4.5	-11°	-9°	0.4	DXGU0703**R/L	0.9

Note: Right hand toolholders (R) are used with right hand inserts (R)
Left hand toolholders (L) are used with left hand inserts (L)

*Torque: Recommended torque (Nm) for clamping

SPARE PARTS

Designation	Clamping screw	Wrench
E***-SDZXR/L...	SR34-514	T-7F

INSERTS

Trigon, 80°

Application	Chipbreaker Appearance (Cross section)	f - ap	Cat. No	Grades: Coating AH725	Coating SH725	Coated cermet GT9530	Cermet NS9530	Carbide KS05F	I.C.dia ød	Thick-ness s	Hole dia ød1	Corner radius rε
Finishing to medium cutting (Sharp edge)	JTS 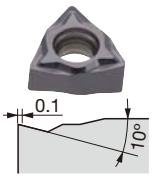	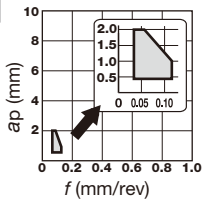	WXGU040301MFR-JTS		✓				6.35	3.18	2.7	< 0.1*
			WXGU040301MFL-JTS		✓				6.35	3.18	2.7	< 0.1*
			WXGU040302MFR-JTS		✓				6.35	3.18	2.7	< 0.2*
			WXGU040302MFL-JTS		✓				6.35	3.18	2.7	< 0.2*
Finishing to medium cutting	JTS 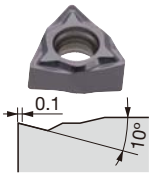	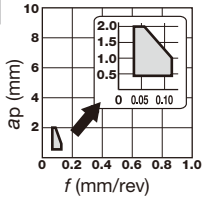	WXGU040301MR-JTS	✓					6.35	3.18	2.7	< 0.1*
			WXGU040301ML-JTS	✓					6.35	3.18	2.7	< 0.1*
			WXGU040302MR-JTS	✓					6.35	3.18	2.7	< 0.2*
			WXGU040302ML-JTS	✓					6.35	3.18	2.7	< 0.2*
Finishing (Low cutting force) (Sharp edge)	JSS 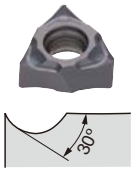	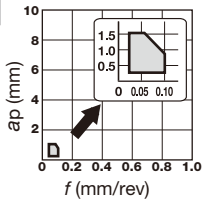	WXGU040301MFR-JSS		✓				6.35	3.18	2.7	< 0.1*
			WXGU040301MFL-JSS		✓				6.35	3.18	2.7	< 0.1*
			WXGU040302MFR-JSS		✓				6.35	3.18	2.7	< 0.2*
			WXGU040302MFL-JSS		✓				6.35	3.18	2.7	< 0.2*
Finishing (Low cutting force)	JSS 	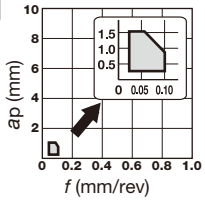	WXGU040301MR-JSS	✓					6.35	3.18	2.7	< 0.1*
			WXGU040301ML-JSS	✓					6.35	3.18	2.7	< 0.1*
			WXGU040302MR-JSS	✓					6.35	3.18	2.7	< 0.2*
			WXGU040302ML-JSS	✓					6.35	3.18	2.7	< 0.2*
Finishing to medium cutting	TS 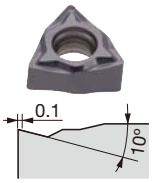	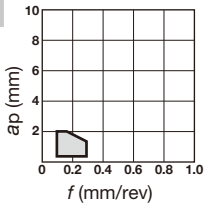	WXGU040302R-TS	✓		✓	✓	✓	6.35	3.18	2.7	0.2
			WXGU040302L-TS	✓		✓	✓	✓	6.35	3.18	2.7	0.2
			WXGU040304R-TS	✓		✓	✓	✓	6.35	3.18	2.7	0.4
			WXGU040304L-TS	✓		✓	✓	✓	6.35	3.18	2.7	0.4
			WXGU040308R-TS	✓		✓	✓	✓	6.35	3.18	2.7	0.8
			WXGU040308L-TS	✓		✓	✓	✓	6.35	3.18	2.7	0.8
Finishing	TSW Wiper 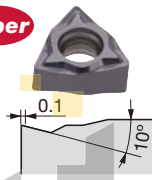	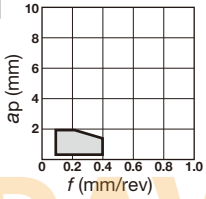	WXGU040304R-TSW	✓		✓	✓		6.35	3.18	2.7	0.4
			WXGU040304L-TSW	✓		✓	✓		6.35	3.18	2.7	0.4
			WXGU040308R-TSW	✓		✓	✓		6.35	3.18	2.7	0.8
			WXGU040308L-TSW	✓		✓	✓		6.35	3.18	2.7	0.8

* Corner radius has minus tolerance.

✓ : Stocked items

Trigon, 80°

Application	Chipbreaker Appearance (Cross section)	f - ap	Cat. No	Grades: Coating AH725	Coating SH725	Coated cermet GT9530	Cermet NS9530	Carbide KS05F	I.C.dia ød	Thick-ness s	Hole dia ød1	Corner radius rε
Finishing (Low cutting force)	SS 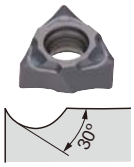	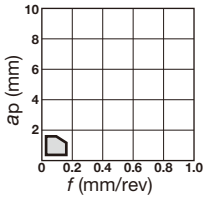	WXGU040302R-SS	✓		✓	✓	✓	6.35	3.18	2.7	0.2
			WXGU040302L-SS	✓		✓	✓	✓	6.35	3.18	2.7	0.2
			WXGU040304R-SS	✓		✓	✓	✓	6.35	3.18	2.7	0.4
			WXGU040304L-SS	✓		✓	✓	✓	6.35	3.18	2.7	0.4

* Corner radius has minus tolerance.

Rhombic, 55°

Application	Chipbreaker Appearance (Cross section)	f - ap	Cat. No	Grades: Coating AH725	Coating SH725	Coated cermet GT9530	Cermet NS9530	Carbide KS05F	I.C.dia ød	Thick-ness s	Hole dia ød1	Corner radius rε
Finishing (sharp edge)	JRP 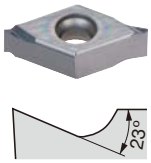	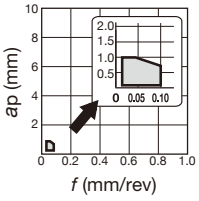	DXGU070301MFRE-JRP		✓				6.35	3.18	2.7	< 0.1*
			DXGU070301MFLE-JRP		✓				6.35	3.18	2.7	< 0.1*
			DXGU070302MFRE-JRP		✓				6.35	3.18	2.7	< 0.2*
			DXGU070302MFLE-JRP		✓				6.35	3.18	2.7	< 0.2*
Finishing to medium cutting (sharp edge)	JTS 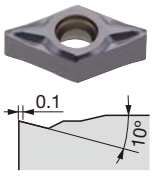	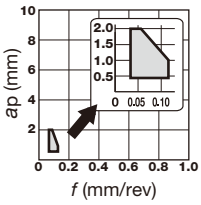	DXGU070301MFR-JTS		✓				6.35	3.18	2.7	< 0.1*
			DXGU070301MFL-JTS		✓				6.35	3.18	2.7	< 0.1*
			DXGU070302MFR-JTS		✓				6.35	3.18	2.7	< 0.2*
			DXGU070302MFL-JTS		✓				6.35	3.18	2.7	< 0.2*
Finishing to medium cutting	JTS 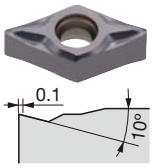	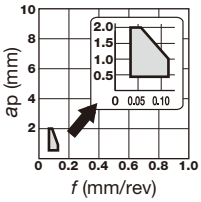	DXGU070301MR-JTS	✓					6.35	3.18	2.7	< 0.1*
			DXGU070301ML-JTS	✓					6.35	3.18	2.7	< 0.1*
			DXGU070302MR-JTS	✓					6.35	3.18	2.7	< 0.2*
			DXGU070302ML-JTS	✓					6.35	3.18	2.7	< 0.2*
Finishing (Low cutting force) (sharp edge)	JSS 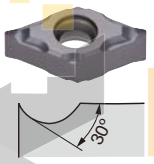	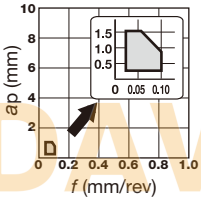	DXGU070301MFR-JSS		✓				6.35	3.18	2.7	< 0.1*
			DXGU070301MFL-JSS		✓				6.35	3.18	2.7	< 0.1*
			DXGU070302MFR-JSS		✓				6.35	3.18	2.7	< 0.2*
			DXGU070302MFL-JSS		✓				6.35	3.18	2.7	< 0.2*

* Corner radius has minus tolerance.

✓ : Stocked items

Rhombic, 55°

Application	Chipbreaker Appearance (Cross section)	f - ap	Cat. No	Grades: Coating AH725	Coating SH725	Coated cermet GT9530	Cermet NS9530	Carbide KS05F	I.C.dia ød	Thick-ness s	Hole dia ød1	Corner radius rε
Finishing (Low cutting force)	JSS 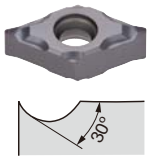	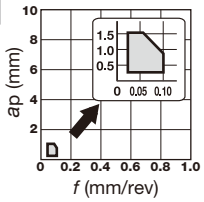	DXGU070301MR-JSS	✓					6.35	3.18	2.7	< 0.1*
			DXGU070301ML-JSS	✓					6.35	3.18	2.7	< 0.1*
			DXGU070302MR-JSS	✓					6.35	3.18	2.7	< 0.2*
			DXGU070302ML-JSS	✓					6.35	3.18	2.7	< 0.2*
Finishing to medium cutting	TS 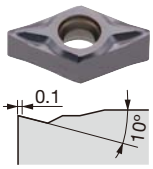	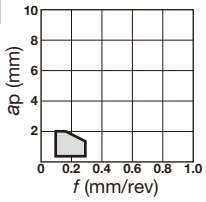	DXGU070302R-TS	✓		✓	✓	✓	6.35	3.18	2.7	0.2
			DXGU070302L-TS	✓		✓	✓	✓	6.35	3.18	2.7	0.2
			DXGU070304R-TS	✓		✓	✓	✓	6.35	3.18	2.7	0.4
			DXGU070304L-TS	✓		✓	✓	✓	6.35	3.18	2.7	0.4
			DXGU070308R-TS	✓		✓	✓	✓	6.35	3.18	2.7	0.8
			DXGU070308L-TS	✓		✓	✓	✓	6.35	3.18	2.7	0.8
Finishing (Low cutting force)	SS 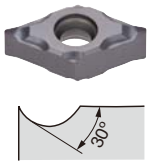	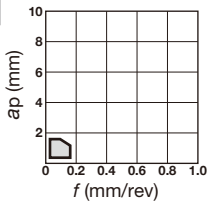	DXGU070302R-SS	✓		✓	✓	✓	6.35	3.18	2.7	0.2
			DXGU070302L-SS	✓		✓	✓	✓	6.35	3.18	2.7	0.2
			DXGU070304R-SS	✓		✓	✓	✓	6.35	3.18	2.7	0.4
			DXGU070304L-SS	✓		✓	✓	✓	6.35	3.18	2.7	0.4

* Corner radius has minus tolerance.

Rhombic, 35°

Application	Chipbreaker Appearance (Cross section)	f - ap	Cat. No	Grades: Coating AH725	Coating SH725	Coated cermet GT9530	Cermet NS9530	Carbide KS05F	I.C.dia ød	Thick-ness s	Hole dia ød1	Corner radius rε
Finishing (sharp edge)	JRP 	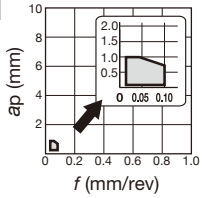	VXGU09T201MFRE-JRP		✓				5.56	2.78	2.5	<0.1*
			VXGU09T201MFLE-JRP		✓				5.56	2.78	2.5	<0.1*
			VXGU09T202MFRE-JRP		✓				5.56	2.78	2.5	<0.2*
			VXGU09T202MFLE-JRP		✓				5.56	2.78	2.5	<0.2*

* Corner radius has minus tolerance.

✓ : Stocked items

STANDARD CUTTING CONDITIONS

FOR EXTERNAL TURNING

Applications	ISO	Workpiece materials	Priority	Chip-breaker	Grades	Cutting speed *Vc* (m/min)	Depth of cut *ap* (mm)	Feed *f* (mm/rev)
For swiss type automatic lathes	P	Low carbon steel (SS400 / E275A, etc.) Carbon steel (S45C / C45, etc.) Low alloy steel (SCM415, etc.) Alloy steel (SCM440 / 42CrMo4, etc.)	With high sharpness	JSS	SH725	50 - 180	0.1 - 1.5	0.03 - 0.10
			First choice	JTS	AH725	50 - 180	0.1 - 2.0	0.03 - 0.10
	M	Stainless steel (Austenitic) (SUS304 / X5CrNi18-9, etc.) Stainless steel (Martensitic and ferritic) (SUS430 / X6Cr17, etc.) Stainless steel (Precipitation hardened) (SUS630 / X5CrNiCuNb16-4, etc.)	First choice	JSS	SH725	50 - 180	0.1 - 1.5	0.03 - 0.10
			For impact resistance	JTS	AH725	50 - 180	0.1 - 2.0	0.03 - 0.10
For small size CNC lathes	P	Low carbon steel (SS400 / E275A, etc.) Carbon steel (S45C / C45, etc.) Low alloy steel (SCM415, etc.) Alloy steel (SCM440 / 42CrMo4, etc.)	First choice	SS	AH725	50 - 180	0.15 - 1.5	0.05 - 0.2
				TS	AH725	50 - 180	0.3 - 2.0	0.08 - 0.3
			For improved surface finish	SS	NS9530	80 - 200	0.15 - 1.5	0.05 - 0.2
				TS	NS9530	80 - 200	0.3 - 2.0	0.08 - 0.3
			For wear resistance	SS	GT9530	80 - 250	0.15 - 1.5	0.05 - 0.2
				TS	GT9530	80 - 250	0.3 - 2.0	0.08 - 0.3
	M	Stainless steel (Austenitic) (SUS304 / X5CrNi18-9, etc.) Stainless steel (Martensitic and ferritic) (SUS430 / X6Cr17, etc.) Stainless steel (Precipitation hardened) (SUS630 / X5CrNiCuNb16-4, etc.)	First choice	SS	AH725	50 - 150	0.15 - 1.5	0.05 - 0.2
			For impact resistance	TS	AH725	50 - 150	0.3 - 2.0	0.08 - 0.3

FOR INTERNAL TURNING

ISO	Workpiece materials	Grades: First Choice	Grades: For surface finish	Grades: For wear resistance (High speed)	Cutting speed *Vc* (m/min)	Depth of cut *ap* (mm)	Feed *f* (mm/rev)
P	Low carbon steel (SS400 / E275A, S25C / C25, etc.)	AH725	-	-	50 - 180	0.3 - 2.0	0.08 - 0.3
		-	NS9530	-	80 - 250	0.3 - 2.0	0.08 - 0.3
		-	-	GT9530	80 - 300	0.3 - 2.0	0.08 - 0.3
	Carbon steel (S45C / C45, S55C / C55, etc.)	AH725	-	-	50 - 180	0.3 - 2.0	0.08 - 0.3
		-	NS9530	-	80 - 250	0.3 - 2.0	0.08 - 0.3
		-	-	GT9530	80 - 300	0.3 - 2.0	0.08 - 0.3
	Low alloy steel (SCM415, etc.)	AH725	-	-	50 - 180	0.3 - 2.0	0.08 - 0.3
		-	NS9530	-	80 - 250	0.3 - 2.0	0.08 - 0.3
		-	-	GT9530	80 - 300	0.3 - 2.0	0.08 - 0.3
	Alloy steel (SCM440 / 42CrMo4, SCr420 / 20Cr4, etc.)	AH725	-	-	50 - 180	0.3 - 2.0	0.08 - 0.3
		-	NS9530	-	80 - 250	0.3 - 2.0	0.08 - 0.3
		-	-	GT9530	80 - 300	0.3 - 2.0	0.08 - 0.3
M	Stainless steel (Austenitic) (SUS304 / X5CrNi18-9, SUS316 / X5CrNiMo17-12-3, etc.)	AH725	-	-	50 - 150	0.3 - 2.0	0.08 - 0.3
	Stainless steel (Martensitic and ferritic) (SUS430 / X6Cr17, SUS416 / X20Cr13, etc.)	AH725	-	-	50 - 150	0.3 - 2.0	0.08 - 0.3
	Stainless steel (Precipitation hardening) (SUS630 / X5CrNiCuNb16-4, etc.)	AH725	-	-	50 - 150	0.3 - 2.0	0.08 - 0.3
K	Grey cast iron (FC250 / 250 / GG25, etc.)	AH725	-	-	50 - 180	0.3 - 2.0	0.08 - 0.3
		-	NS9530	-	80 - 250	0.3 - 2.0	0.08 - 0.3
		-	-	GT9530	80 - 300	0.3 - 2.0	0.08 - 0.3
	Ductile cast iron (FCD700 / GGG70, etc.)	AH725	-	-	50 - 120	0.3 - 2.0	0.08 - 0.3
		-	NS9530	-	80 - 150	0.3 - 2.0	0.08 - 0.3
		-	-	GT9530	80 - 180	0.3 - 2.0	0.08 - 0.3
N	Non ferrous Metal (Aluminum alloy, etc.)	KS05F	-	-	100 - 300	0.3 - 2.0	0.08 - 0.3
	Non ferrous Metal (Cu Alloy, etc.)	KS05F	-	-	100 - 300	0.3 - 2.0	0.08 - 0.3

Note: See page 9 for more information about grades.

ISO ECO TURN
TUNGALOY

Maximizes profit and minimizes environmental impact

ISO-EcoTurn features highly economical small-sized insert for turning, effectively reducing machining cost.

- **Highly economical insert:**

- **Small-sized inserts** save natural resources as well as manufacturing cost.

- **Same performance as the regular-sized inserts:**

- The performance level in machining with the depth of cut up to 3 mm (0.118") is identical.

- The thickness of the insert is equal to that of the regular-sized insert, resulting in the same level of fracture resistance.

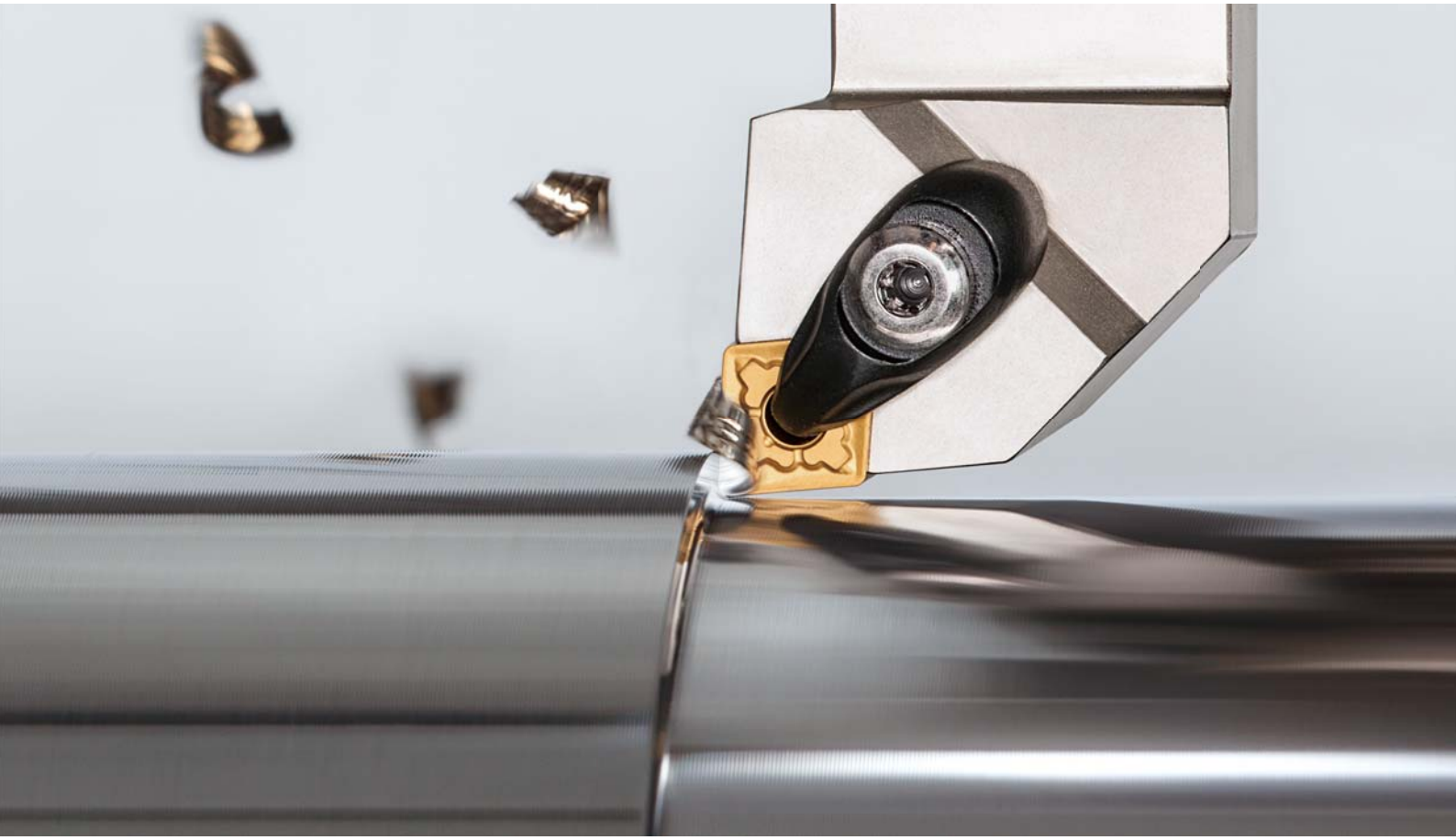

TUNGFORCE TURN
ACCELERATED MACHINING

Line up:

ISO-EcoTurn inserts are available in popular standard shapes and chipbreakers which are identical to those of the regular-sized inserts.

Toolholders:
Lever-clamping type and double-clamping type for profiling and facing

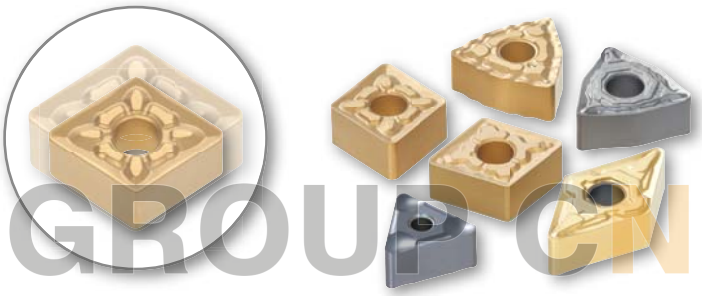

Double-clamp toolholder with 95deg approach angle, for negative 80deg rhombic inserts CN**0904**

TOOLHOLDERS - FOR EXTERNAL TURNING AND FACING

ISO-EcoTurn ACLNR/L

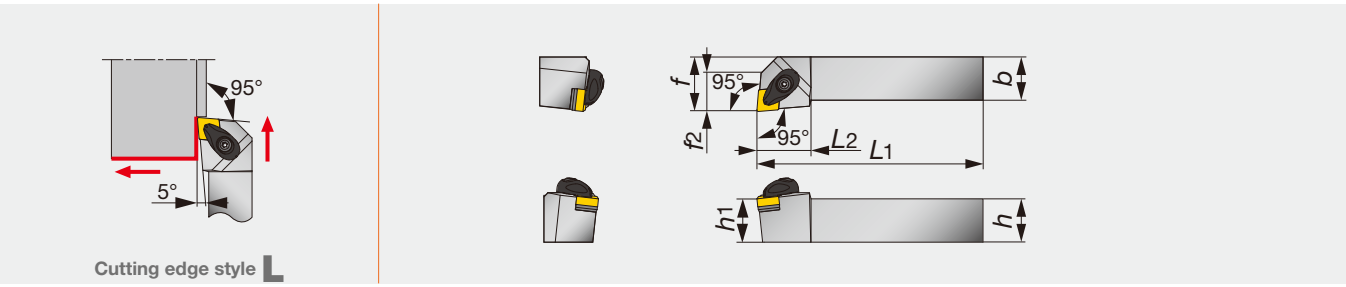

Right hand (R) shown.

Designation	h	b	L1	L2	h1	f	f2	rε	Insert	Torque*
ACLNR/L2020K0904-A	20	20	125	25	20	25	18	0.8	CN**0904**	3.0
ACLNR/L2525M0904-A	25	25	150	25	25	32	18	0.8	CN**0904**	3.0

*Torque: Recommended torque (Nm) for clamping

SPARE PARTS

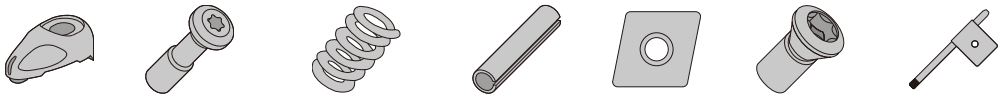

Designation	Clamp	Clamp screw	Spring pin	Spring	Shim	Shim screw	Wrench
ACLNR/L...0904-A	ACP3S-E	ACS-5W	BP-7	SP-2.5	ASC322	CSTB-3.5	T-15F

Double-clamp toolholder with 93deg approach angle, for negative 55deg rhombic

TOOLHOLDERS - FOR EXTERNAL TURNING AND PROFILING

ISO-EcoTurn ADJNR/L

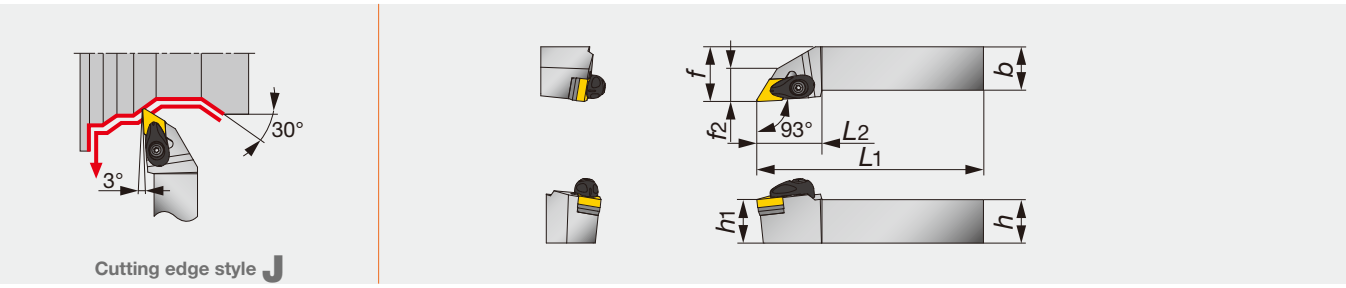

Right hand (R) shown.

Designation	h	b	L1	L2	h1	f	f2	rε	Insert	Torque*
ADJNR/L2020K1104-A	20	20	125	30	20	25	16	0.8	DN**1104**	3.0
ADJNR/L2525M1104-A	25	25	150	30	25	32	19	0.8	DN**1104**	3.0

*Torque: Recommended torque (Nm) for clamping

SPARE PARTS

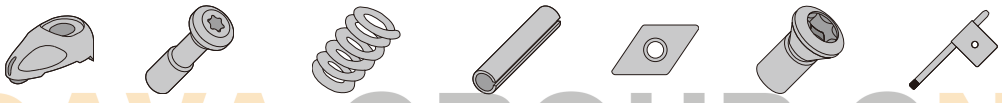

Designation	Clamp	Clamp screw	Spring pin	Spring	Shim	Shim screw	Wrench
ADJNR/L...1104-A	ACP3S-E	ACS-5W	BP-7	SP-2.5	ASD322	CSTB-3.5	T-15F

Double-clamp toolholder with 107.5deg approach angle, for negative 55deg rhombic

TOOLHOLDERS - FOR EXTERNAL TURNING AND PROFILING

ISO-EcoTurn ADQNR/L

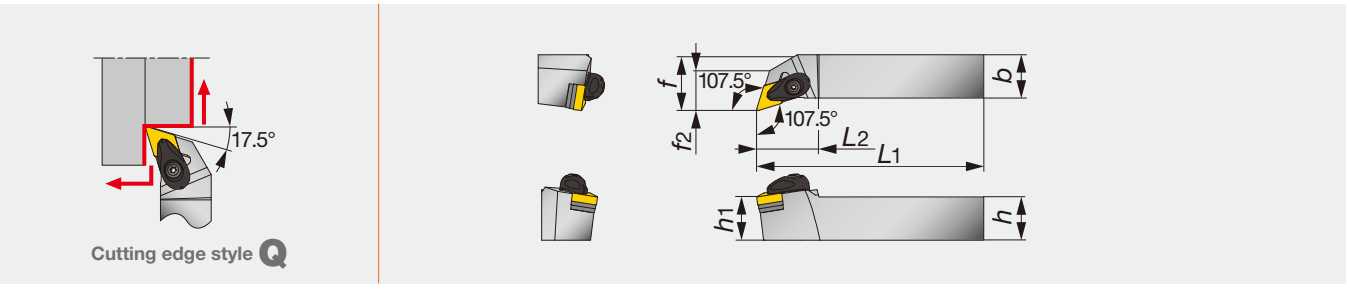

Right hand (R) shown.

Designation	h	b	L1	L2	h1	f	f2	rε	Insert	Torque*
ADQNR/L2020K1104-A	20	20	125	30	20	25	18	0.8	DN**1104**	3.0
ADQNR/L2525M1104-A	25	25	150	30	25	32	20	0.8	DN**1104**	3.0

*Torque: Recommended torque (Nm) for clamping

SPARE PARTS

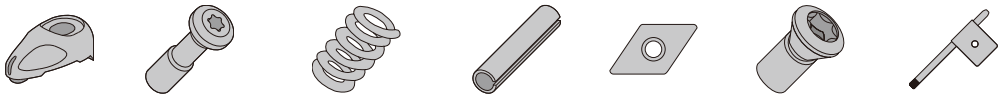

Designation	Clamp	Clamp screw	Spring pin	Spring	Shim	Shim screw	Wrench
ADQNR/L...1104-A	ACP3S-E	ACS-5W	BP-7	SP-2.5	ASD322	CSTB-3.5	T-15F

Double-clamp toolholder with 95deg approach angle, for negative trigon inserts

TOOLHOLDERS - FOR EXTERNAL TURNING AND FACING

ISO-EcoTurn AWLNR/L

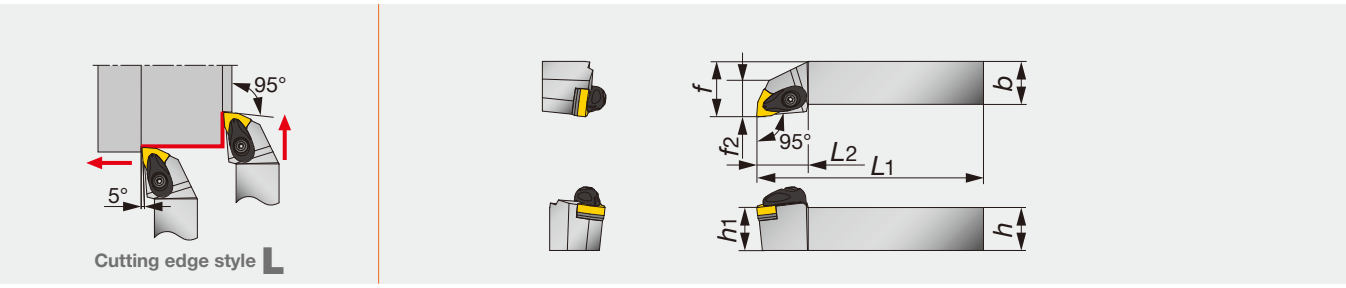

Right hand (R) shown.

Designation	h	b	L1	L2	h1	f	f2	rε	Insert	Torque*
AWLNR/L2020K0604-A	20	20	125	27	20	25	16	0.8	WN**0604**	3.0
AWLNR/L2525M0604-A	25	25	150	27	25	32	23	0.8	WN**0604**	3.0

*Torque: Recommended torque (Nm) for clamping

SPARE PARTS

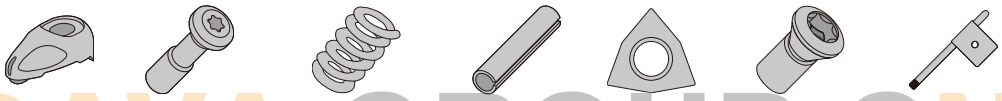

Designation	Clamp	Clamp screw	Spring pin	Spring	Shim	Shim screw	Wrench
AWLNR/L...0604-A	ACP3S-E	ACS-5W	BP-7	SP-2.5	ASW322	CSTB-3.5	T-15F

Lever lock type toolholder with 95deg approach angle, for negative 80deg rhombic

TOOLHOLDERS FOR - EXTERNAL TURNING AND FACING

ISO-EcoTurn PCLNR/L

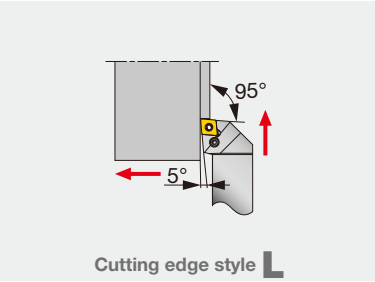

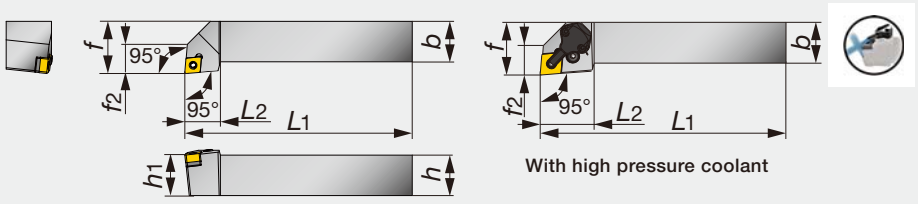

Right hand (R) shown.

Designation	h	b	L1	L2	h1	f	f2	rε	Insert	Torque*
PCLNR/L2020K0904	20	20	125	20	20	25	15	0.8	CN**0904**	2.0
PCLNR/L2525M0904	25	25	150	25	25	32	18	0.8	CN**0904**	2.0
PCLNR/L2525M0904-CHP	25	25	150	33	25	32	18	0.80	CN**0904**	2.0

*Torque: Recommended torque (Nm) for clamping

Lever lock type toolholder with 93deg approach angle, for negative 55deg rhombic inserts DN**1104**

TOOLHOLDERS FOR - EXTERNAL TURNING AND PROFILING

ISO-EcoTurn PDJNR/L

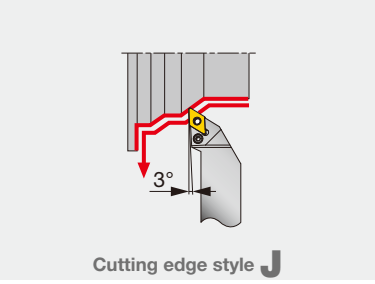

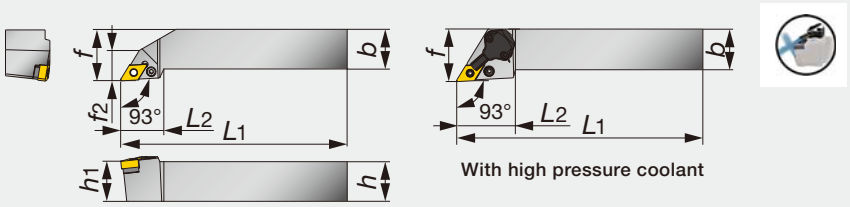

Right hand (R) shown.

Designation	h	b	L1	L2	h1	f	f2	rε	Insert	Torque*
PDJNR/L1616H1104	16	16	100	27	16	20	16	0.8	DN**1104**	2.0
PDJNR/L2020K1104	20	20	125	27	20	25	16	0.8	DN**1104**	2.0
PDJNR/L2525M1104	25	25	150	27	25	32	19	0.8	DN**1104**	2.0
PDJNR/L2525M1104-CHP	25	25	150	36	25	32	-	0.8	DN**1104**	2.0

*Torque: Recommended torque (Nm) for clamping

SPARE PARTS FOR P-TYPE

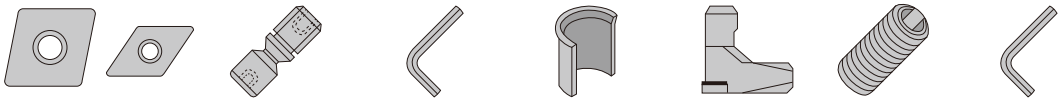

Designation	Shim		Clamping Screw	Wrench for clamping screw	Spring pin	Lever	Coolant screw	Wrench for coolant screw
PCLNR/L...0904	LSC317	-	LCS3	P-2.5	LSP3	LCL33	-	-
PCLNR/L2525M0904-CHP	LSC317	-	LCS3	P-2.5	LSP3	LCL33	SRM4X4TL360	P-2
PDJNR/L...1104	-	ELSD32	LCS3	P-2.5	LSP3	LCL33L	-	-
PDJNR/L2525M1104-CHP	-	ELSD32	LCS3	P-2.5	LSP3	LCL33L	SRM4X4TL360	P-2

COOLANT SET FOR CHP TYPE

Designation	Coolant unit	Mounting screw	Wrench for mounting screw	O-ring
PCLNR/L2525M0904-CHP	CU-CW-CHP	SRM3	T-8F	OR6.4X0.9N
PDJNR/L2525M1104-CHP	CU-D-CHP	SRM3	T-8F	OR6.4X0.9N

Lever lock type toolholder for facing with 91deg approach angle, negative triangle inserts

TOOLHOLDERS - FOR FACING

ISO-EcoTurn PTFNR/L

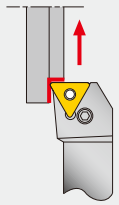

Cutting edge style F

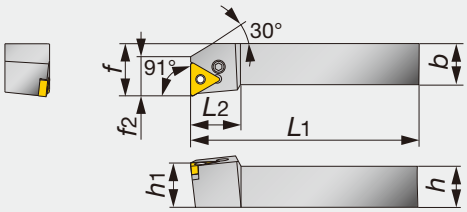

Right hand (R) shown.

Designation	h	b	L1	L2	h1	f	f2	rε	Insert	Torque*
PTFNR/L2020K1104	20	20	125	16	20	25	16	0.8	TN**1104**	2.0
PTFNR/L2525M1104	25	25	150	22	25	32	20	0.8	TN**1104**	2.0

*Torque: Recommended torque (Nm) for clamping

SPARE PARTS

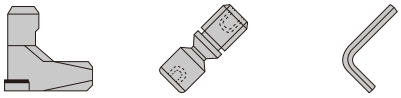

Designation	Lever	Shim screw	Wrench
PT*NR/L...1104	LCL23	LCS23A	P-2.5

Lever lock type toolholder with 91deg approach angle, for negative triangle inserts TN**1104**

TOOLHOLDERS - FOR EXTERNAL TURNING

ISO-EcoTurn PTGNR/L

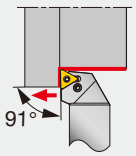

Cutting edge style G

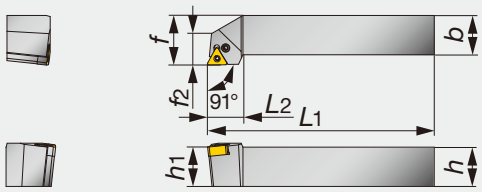

Right hand (R) shown.

Designation	h	b	L1	L2	h1	f	f2	rε	Insert	Torque*
PTGNR/L2020K1104	20	20	125	20	20	25	15	0.8	TN**1104**	2.0
PTGNR/L2525M1104	25	25	150	20	25	32	22.5	0.8	TN**1104**	2.0

*Torque: Recommended torque (Nm) for clamping

SPARE PARTS

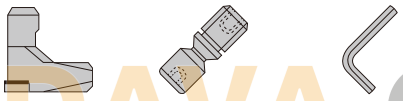

Designation	Lever	Shim screw	Wrench
PT*NR/L...1104	LCL23	LCS23A	P-2.5

Lever lock type toolholder with 93deg approach angle, for negative triangle inserts

TOOLHOLDERS - FOR EXTERNAL TURNING

ISO-EcoTurn PTJNR/L

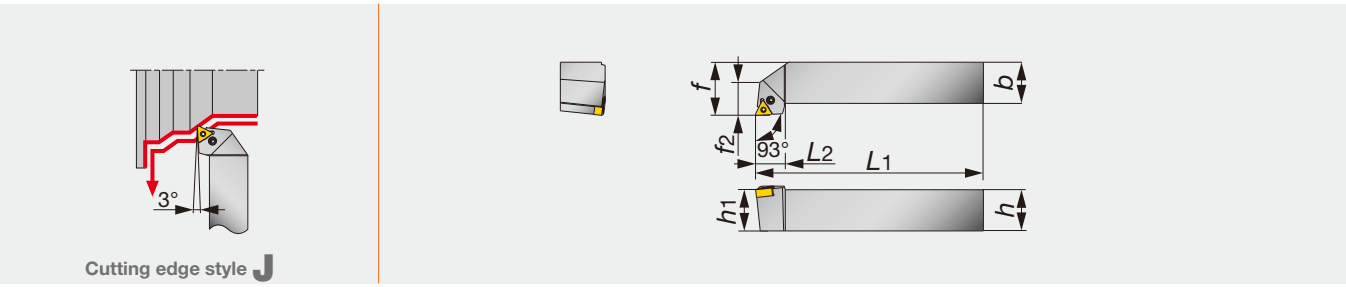

Right hand (R) shown.

Designation	h	b	L1	L2	h1	f	f2	rε	Insert	Torque*
PTJNR/L2525M1104	25	25	150	18	25	32	20	0.8	TN**1104**	2.0

*Torque: Recommended torque (Nm) for clamping

SPARE PARTS

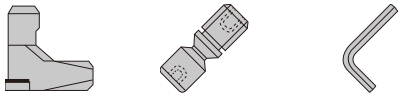

Designation	Lever	Shim screw	Wrench
PT*NR/L...1104	LCL23	LCS23A	P-2.5

Lever lock type toolholder with 95deg approach angle, for negative 80deg trigon

TOOLHOLDERS - FOR FACING

ISO-EcoTurn PWLNR/L

Right hand (R) shown.

Designation	h	b	L1	L2	h1	f	f2	rε	Insert	Torque*
PWLNR/L2020K0604	20	20	125	15	20	25	18	0.8	WN**0604**	2.0
PWLNR/L2525M0604	25	25	150	19	25	32	20	0.8	WN**0604**	2.0

*Torque: Recommended torque (Nm) for clamping

SPARE PARTS

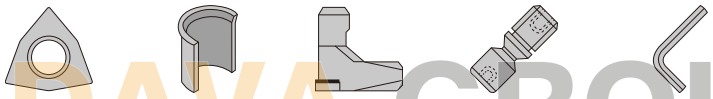

Designation	Shim	Spring pin	Lever	Shim screw	Wrench
PWLNR/L...0604	LSW312	LSP3	LCL3	LCS3	P-2.5

Double-clamp boring bar, for negative 80deg rhombic insert

TOOLHOLDERS - FOR BORING AND FACING

ISO-EcoTurn A-ACLNR/L

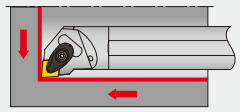

Cutting edge style L

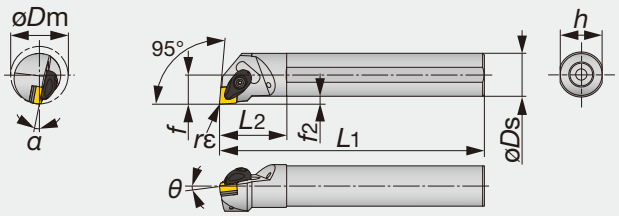

Right hand (R) shown.

Designation	øDm	øDs	f	L1	L2	h	f2	θ	a	rε	Insert	Torque*
A25R-ACLNR/L0904-D320	32	25	17	200	45	23	4.5	-6°	-13°	0.8	CN**0904**	3.0
A32S-ACLNR/L0904-D400	40	32	22	250	50	30	6	-6°	-10°	0.8	CN**0904**	3.0

*Torque: Recommended torque (Nm) for clamping

SPARE PARTS

Designation	Clamp	Clamping screw	Shim	Shim screw	Spring	Spring pin	Wrench
A***-ACLNR/L0904...	ACP3S-E	ACS-5W	ASC322	CSTB-3.5	BP-7	SP-2.5	T-15F

Double-clamp boring bar, for negative 55deg rhombic inserts.

TOOLHOLDERS - FOR BORING AND PROFILING

ISO-EcoTurn A-ADUNR/L

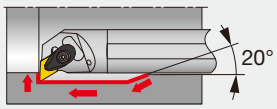

Cutting edge style U

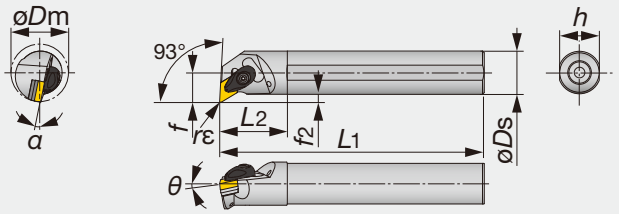

Right hand (R) shown.

Designation	øDm	øDs	f	L1	L2	h	f2	θ	a	rε	Insert	Torque*
A25R-ADUNR/L1104-D320	32	25	17	200	45	23	4.5	-6°	-13°	0.8	DN**1104**	3.0
A32S-ADUNR/L1104-D400	40	32	22	250	50	30	6	-6°	-11°	0.8	DN**1104**	3.0

*Torque: Recommended torque (Nm) for clamping

SPARE PARTS

Designation	Clamp	Clamping screw	Shim	Shim screw	Spring	Spring pin	Wrench
A***-ADUNR/L1104...	ACP3S-E	ACS-5W	ASD322	CSTB-3.5	BP-7	SP-2.5	T-15F

Double-clamp boring bars, for negative trigon insert

TOOLHOLDERS - FOR BORING AND FACING

ISO-EcoTurn A-AWLNR/L

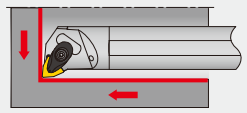

Cutting edge style L

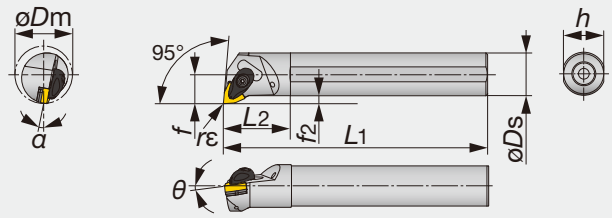

Right hand (R) shown.

Designation	øDm	øDs	f	L1	L2	h	f2	θ	α	rε	Insert	Torque*
A25R-AWLNR/L0604-D320	32	25	17	200	45	23	4.5	-6°	-13°	0.8	WN**0604**	3.0
A32S-AWLNR/L0604-D400	40	32	22	250	50	30	6	-6°	-10°	0.8	WN**0604**	3.0

*Torque: Recommended torque (Nm) for clamping

SPARE PARTS

Designation	Clamp	Clamping screw	Shim	Shim screw	Spring	Spring pin	Wrench
A***-AWLNR/L0604...	ACP3S-E	ACS-5W	ASW322	CSTB-3.5	BP-7	SP-2.5	T-15F

Lever clamp boring bars, for negative 80deg rhombic insert

TOOLHOLDERS - FOR BORING AND INTERNAL FACING

ISO-EcoTurn A-PCLNR/L

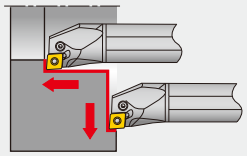

Cutting edge style L

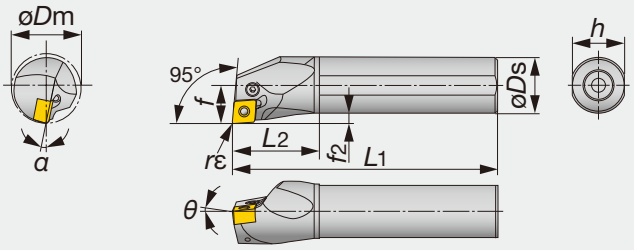

Right hand (R) shown.

Designation	øDm	øDs	f	L1	L2	h	f2	θ	α	rε	Insert	Torque*
A16M-PCLNR/L0904-D200	20	16	11	150	32	15	3.0	-6°	16°	0.8	CN**0904**	1.7
A20Q-PCLNR/L0904-D250	25	20	13	180	36	18	3.0	-6°	12°	0.8	CN**0904**	1.7

*Torque: Recommended torque (Nm) for clamping

SPARE PARTS

Designation	Clamping screw	Lever	Wrench	Oil supply attachment	Screw for oil hole
A16M-PCLNR/L0904-D200	LCS33	LCL33N	P-2F	-	SSHM3-4
A20Q-PCLNR/L0904-D250	LCS33	LCL33N	P-2F	EA20	SSHM3-4

Lever clamp boring bars, for negative 55deg rhombic insert

TOOLHOLDERS - FOR INTERNAL PROFILING

ISO-EcoTurn A-PDUNR/L

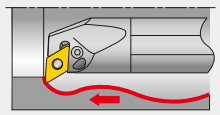

Cutting edge style U

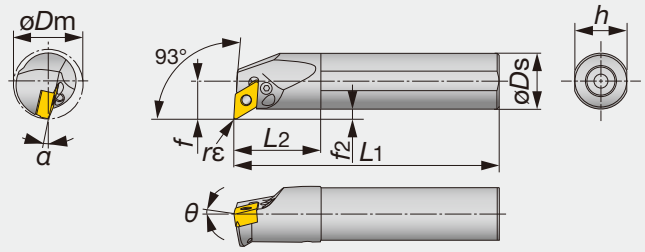

Right hand (R) shown.

Designation	øDm	øDs	f	L1	L2	h	f2	θ	α	rε	Insert	Torque*
A20Q-PDUNR/L1104-D250	25	20	13	180	36	18	3.0	-6°	-14°	0.8	DN**1104**	1.7

When using a right or left hand insert, the right hand insert (R) is used for the left hand toolholders (PDUNL ** type), and the left hand insert (L) is used for the right hand toolholders (PDUNR ** type).

*Torque: Recommended torque (Nm) for clamping

SPARE PARTS

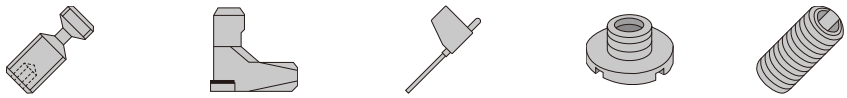

Designation	Clamping screw	Lever	Wrench	Oil supply attachment	Screw for oil hole
A20Q-PDUNR/L1104-D250	LCS22A	LCL33NL	P-2F	EA20	SSHM2.5-3

Lever clamp boring bars, for negative triangle insert

TOOLHOLDERS - FOR BORING

ISO-EcoTurn A-PTFNR/L

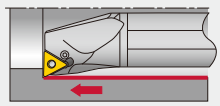

Cutting edge style F

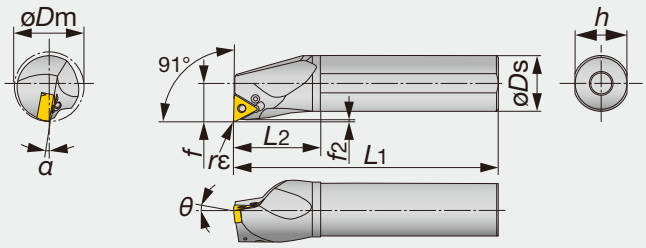

Right hand (R) shown.

Designation	øDm	øDs	f	L1	L2	h	f2	θ	α	rε	Insert	Torque*
A25R-PTFNR/L1104-D320	32	25	17	200	45	23	1.31	-6°	-12°	0.8	TN**1104**	2.0
A32S-PTFNR/L1104-D400	40	32	22	250	50	30	1.25	-6°	-10°	0.8	TN**1104**	2.0

*Torque: Recommended torque (Nm) for clamping

SPARE PARTS

Designation	Clamping screw	Lever	Wrench	Oil supply attachment	Screw for oil hole
A25R-PTFNR/L1104-D320	LCS23A	LCL23	P-2.5	EA-25	SSHM4-5
A32S-PTFNR/L1104-D400	LCS23A	LCL23	P-2.5	EA-32	SSHM4-5

Lever clamp boring bars, for negative triangle insert

TOOLHOLDERS - FOR BORING

ISO-EcoTurn A-PTUNR/L

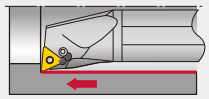

Cutting edge style **U**

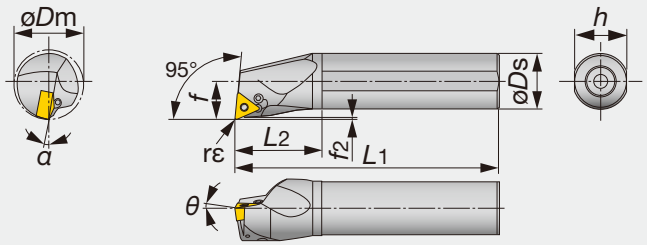

Right hand (R) shown.

Designation	øDm	øDs	f	L1	L2	h	f2	θ	α	rε	Insert	Torque*
A25R-PTUNR/L1104-D320	32	25	17	200	45	23	1.22	-6°	-12°	0.8	TN**1104**	2.0
A32S-PTUNR/L1104-D400	40	32	22	250	50	30	1.16	-6°	-10°	0.8	TN**1104**	2.0

*Torque: Recommended torque (Nm) for clamping

SPARE PARTS

Designation	Clamping screw	Lever	Wrench	Oil supply attachment	Screw for oil hole
A25R-PTUNR/L1104-D320	LCS23A	LCL23	P-2.5	EA-25	SSHM4-5
A32S-PTUNR/L1104-D400	LCS23A	LCL23	P-2.5	EA-32	SSHM4-5

Lever clamp boring bars, for negative trigon insert

TOOLHOLDERS - FOR BORING AND FACING

ISO-EcoTurn A-PWLNR/L

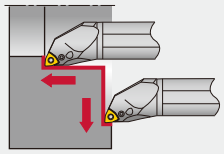

Cutting edge style **L**

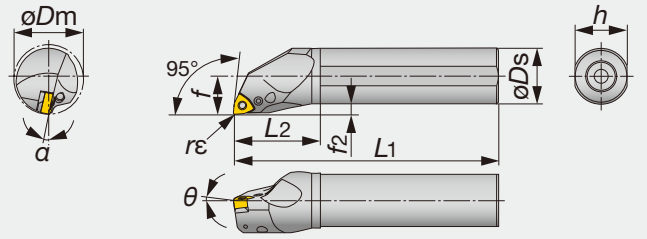

Right hand (R) shown.

Designation	øDm	øDs	f	L1	L2	h	f2	θ	α	rε	Insert	Torque*
A16M-PWLNR/L0604-D200	20	16	11	150	32	15	3.0	-8°	-17°	0.8	WN**0604**	1.7
A20Q-PWLNR/L0604-D250	25	20	13	180	36	18	3.0	-6°	-14°	0.8	WN**0604**	1.7

*Torque: Recommended torque (Nm) for clamping

SPARE PARTS

Designation	Clamping screw	Lever	Wrench	Oil supply attachment	Screw for oil hole
A16M-PWLNR/L0604-D200	LCS33	LCL33N	P-2F	-	SSHM3-4
A20Q-PWLNR/L0604-D250	LCS33	LCL33N	P-2F	EA20	SSHM3-4

INSERT NEGATIVE TYPE

Rhombic, 80°

Application	Chipbreaker: Appearance (Cross section)	f - ap	Cat. No	T9105	T9115	T9125	T5115	AH630	AH645	NS9530	GT9530	I.C.dia ød	Thick-ness s	Hole dia ød1	Corner radius rε
				Stocked grades: Coating						Cermet	Coated cermet				
Finishing	TSF 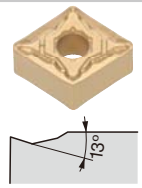	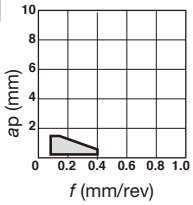	CNMG090404E-TSF		✓	✓				✓	✓	9.525	4.76	3.81	0.4
			*CNMG090408E-TSF		✓	✓				✓	✓	9.525	4.76	3.81	0.8
	SS 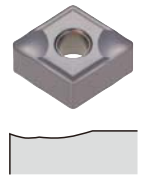	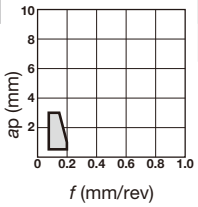	CNMG090404E-SS					✓	✓			9.525	4.76	3.81	0.4
			*CNMG090408E-SS					✓	✓			9.525	4.76	3.81	0.8
	ZF 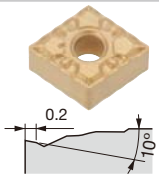	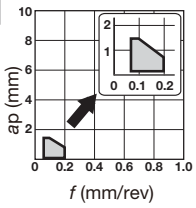	CNMG090404E-ZF		✓	✓						9.525	4.76	3.81	0.4
	FW Wiper 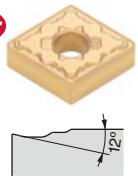	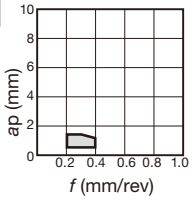	CNMG090404E-FW	✓	✓	✓				✓	✓	9.525	4.76	3.81	0.4
			CNMG090408E-FW	✓	✓	✓				✓	✓	9.525	4.76	3.81	0.8
Finishing to medium cutting	ZM 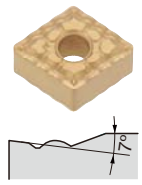	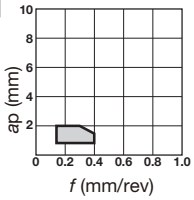	CNMG090408E-ZM		✓	✓						9.525	4.76	3.81	0.8
	SW Wiper 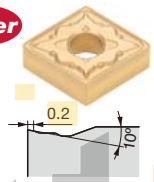	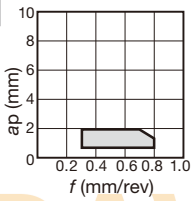	CNMG090408E-SW	✓	✓	✓	✓					9.525	4.76	3.81	0.8
			CNMG090412E-SW	✓	✓	✓	✓					9.525	4.76	3.81	1.2

*Note: Chipbreaker cross sections are of the inserts marked *

✓ : Stocked items

Rhombic, 80°

Application	Chipbreaker Appearance (Cross section)	f - ap	Cat. No	Stocked grades: Coating T9115	T9125	T6120	T6130	AH630	AH645	Cermet NS9530		Coated cermet GT9530		I.C.dia ød	Thick-ness s	Hole dia ød1	Corner radius rε
Medium cutting	TM 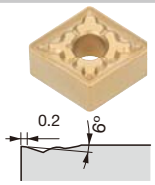	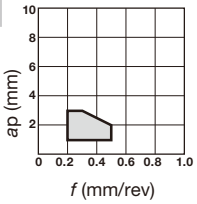	CNMG090404E-TM	✓	✓									9.525	4.76	3.81	0.4
			*CNMG090408E-TM	✓	✓									9.525	4.76	3.81	0.8
			CNMG090412E-TM	✓	✓									9.525	4.76	3.81	1.2
	SM 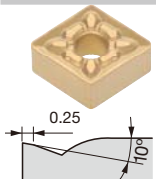	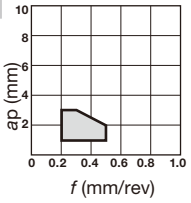	CNMG090404E-SM			✓	✓	✓						9.525	4.76	3.81	0.4
			*CNMG090408E-SM			✓	✓	✓						9.525	4.76	3.81	0.8
			CNMG090412E-SM			✓	✓	✓						9.525	4.76	3.81	1.2

*Note: Chipbreaker cross sections are of the inserts marked *

Rhombic, 55°

Application	Chipbreaker Appearance (Cross section)	f - ap	Cat. No	Stocked grades: Coating T9115	T9125	T6120	T6130	AH630	AH645	Cermet NS9530		Coated cermet GT9530		I.C.dia ød	Thick-ness s	Hole dia ød1	Corner radius rε
Finishing	TSF 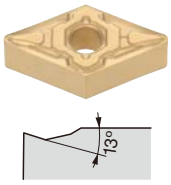	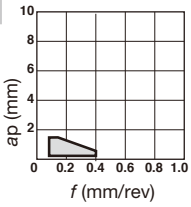	DNMG110404E-TSF	✓	✓					✓		✓		9.525	4.76	3.81	0.4
			*DNMG090408E-TSF	✓	✓					✓		✓		9.525	4.76	3.81	0.8
			DNMG110412E-TSF	✓	✓					✓		✓		9.525	4.76	3.81	1.2
	SS 	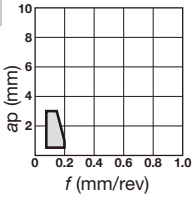	DNMG110404E-SS					✓	✓					9.525	4.76	3.81	0.4
			*DNMG110408E-SS					✓	✓					9.525	4.76	3.81	0.8
	ZF 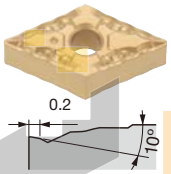	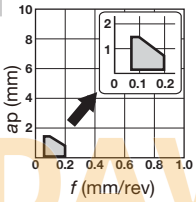	DNMG110404E-ZF	✓	✓									9.525	4.76	3.81	0.4

✓ : Stocked items

Rhombic, 55°

Application	Chipbreaker Appearance (Cross section)	f - ap	Cat. No	Stocked grades: Coating T9115	T9125	T6120	T6130	AH630	AH645	Cermet NS9530		Coated cermet GT9530		I.C.dia ød	Thick-ness s	Hole dia ød1	Corner radius rε
Finishing	FW 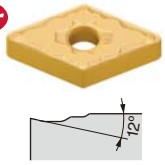	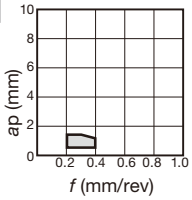	DNMG110404E-FW	✓										9.525	4.76	3.81	0.4
			DNMG110408E-FW	✓										9.525	4.76	3.81	0.8
Finishing to medium cutting	ZM 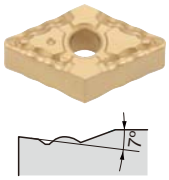	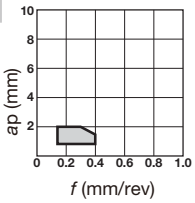	DNMG110408E-ZM	✓	✓									9.525	4.76	3.81	0.8
	SW 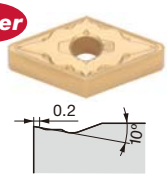	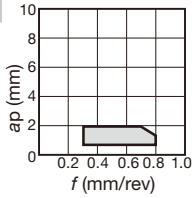	DNMG110408E-SW	✓										9.525	4.76	3.81	0.8
			DNMG110412E-SW	✓										9.525	4.76	3.81	1.2
Medium cutting	TM 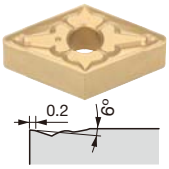	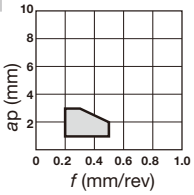	DNMG110404E-TM	✓	✓									9.525	4.76	3.81	0.4
			*DNMG110408E-TM	✓	✓									9.525	4.76	3.81	0.8
			DNMG110412E-TM	✓	✓									9.525	4.76	3.81	1.2
	SM 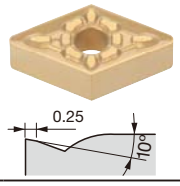	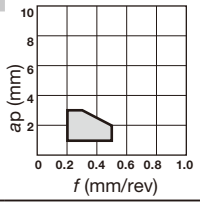	DNMG110404E-SM			✓	✓	✓						9.525	4.76	3.81	0.4
			*DNMG110408E-SM			✓	✓	✓						9.525	4.76	3.81	0.8

*Note: Chipbreaker cross sections are of the inserts marked *

✓ : Stocked items

Triangular, 60°

Application	Chipbreaker: Appearance (Cross section)	f - ap	Cat. No	Stocked grades: Coating T9115	T9125	T6120	T6130	AH630	AH645	Cermet NS9530		Coated cermet GT9530		I.C.dia ød	Thick-ness s	Hole dia ød1	Corner radius rε
Finishing	TSF 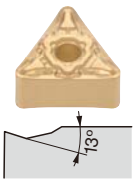	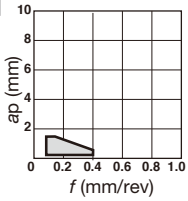	TNMG110404E-TSF	✓	✓					✓		✓		6.35	4.76	2.26	0.4
			*TNMG1104048-TSF	✓	✓					✓		✓		6.35	4.76	2.26	0.8
	SS 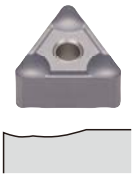	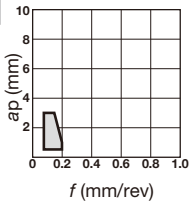	TNMG110404E-SS					✓	✓					6.35	4.76	2.26	0.4
			*TNMG110408E-SS					✓	✓					6.35	4.76	2.26	0.8
	FW Wiper 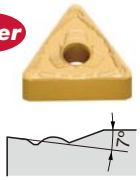	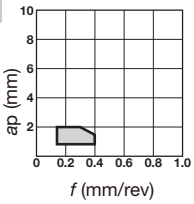	TNMG110404E-FW	✓										6.35	4.76	2.26	0.4
			TNMG110408E-FW	✓										6.35	4.76	2.26	0.8
Finishing to medium cutting	SW Wiper 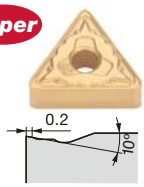	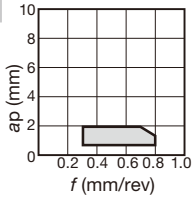	TNMG110408E-SW	✓										6.35	4.76	2.26	0.8
			TNMG110412E-SW	✓										6.35	4.76	2.26	1.2
Medium cutting	TM 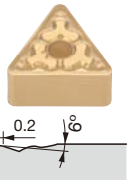	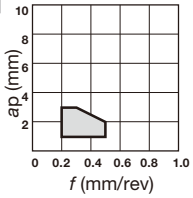	TNMG110404E-TM	✓	✓									6.35	4.76	2.26	0.4
			*TNMG110408E-TM	✓	✓									6.35	4.76	2.26	0.8
			TNMG110412E-TM	✓	✓									6.35	4.76	2.26	1.2
	SM 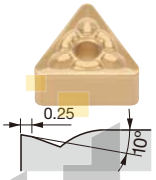	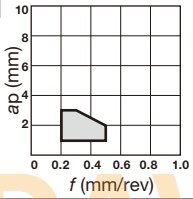	TNMG110404E-SM			✓	✓	✓						6.35	4.76	2.26	0.4
			*TNMG110408E-SM			✓	✓	✓						6.35	4.76	2.26	0.8

*Note: Chipbreaker cross sections are of the inserts marked *

✓ : Stocked items

Trigon, 80°

Application	Chipbreaker Appearance (Cross section)	f - ap	Cat. No	T9105	T9115	T9125	T5115	AH630	AH645	NS9530	GT9530	I.C.dia ød	Thick-ness s	Hole dia ød1	Corner radius rε
				Stocked grades: Coating						Cermet	Coated cermet				
Finishing	TSF 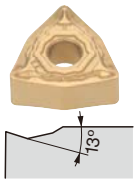	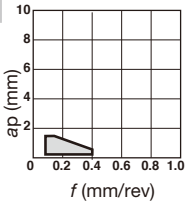	WNMG060404E-TSF		✓	✓				✓	✓	9.525	4.76	3.81	0.4
			* WNMG060408E-TSF		✓	✓				✓	✓	9.525	4.76	3.81	0.8
			WNMG060412E-TSF			✓				✓	✓	9.525	4.76	3.81	1.2
	SS 	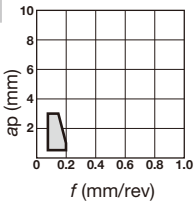	WNMG060404E-SS					✓	✓			9.525	4.76	3.81	0.4
			* WNMG060408E-SS					✓	✓			9.525	4.76	3.81	0.8
			WNMG060412E-SS					✓	✓			9.525	4.76	3.81	1.2
	ZF 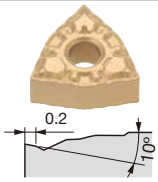	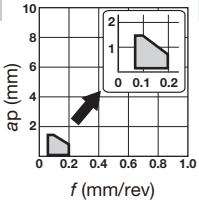	WNMG060404E-ZF		✓	✓						9.525	4.76	3.81	0.4
	FW Wiper 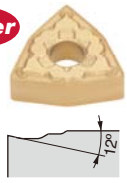	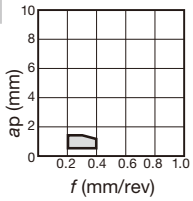	WNMG060404E-FW	✓	✓	✓				✓	✓	9.525	4.76	3.81	0.4
			WNMG060408E-FW	✓	✓	✓				✓	✓	9.525	4.76	3.81	0.8
Finishing to medium cutting	ZM 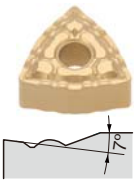	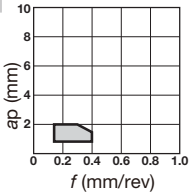	WNMG060408E-ZM		✓	✓						9.525	4.76	3.81	0.8
	SW Wiper 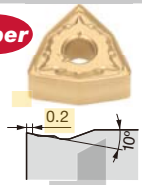	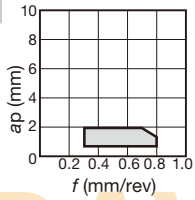	WNMG060408E-SW	✓	✓	✓	✓					9.525	4.76	3.81	0.8
			WNMG060412E-SW	✓	✓	✓	✓					9.525	4.76	3.81	1.2

✓ : Stocked items

Trigon, 80°

Application	Chipbreaker: Appearance (Cross section)	f - ap	Cat. No	Stocked grades: Coating T9115	T9125	T6120	T6130	AH630	AH645	Cermet NS9530		Coated cermet GT9530		I.C.dia ød	Thick-ness s	Hole dia ød1	Corner radius rε
Medium cutting	TM 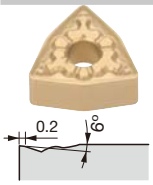	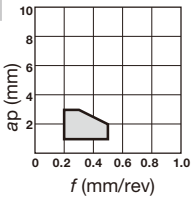	WNMG060404E-TM	✓	✓									9.525	4.76	3.81	0.4
			* WNMG060408E-TM	✓	✓									9.525	4.76	3.81	0.8
			WNMG060412E-TM	✓	✓									9.525	4.76	3.81	1.2
	SM 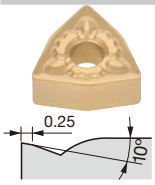	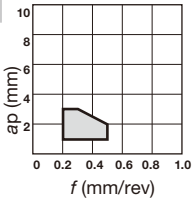	WNMG060404E-SM			✓	✓	✓						9.525	4.76	3.81	0.4
			* WNMG060408E-SM			✓	✓	✓						9.525	4.76	3.81	0.8
			WNMG060412E-SM			✓	✓	✓						9.525	4.76	3.81	1.2

*Note: Chipbreaker cross sections are of the inserts marked *

✓ : Stocked items

STANDARD CUTTING CONDITIONS

ISO	Workpiece materials	Grade	Cutting speed *Vc*(m/min)
P	Low carbon steels Alloy steels (S15C/C15, SS400/E275A, etc.)	NS9530	150 - 250
		GT9530	150 - 300
		T9115	150 - 300
		T9125	120 - 250
	Medium carbon steels Alloy steels (S45C/C45, SCM440/42CrMo4, etc.)	NS9530	80 - 220
		GT9530	80 - 250
		T9115	150 - 300
		T9125	80 - 200
	High carbon steels Alloy steels (SKD11/X153CrMoV12, etc.)	NS9530	80 - 180
		GT9530	80 - 200
		T9115	120 - 250
		T9125	80 - 150
M	Austenitic (SUS304/X5CrNi18-9, SUS316/X5CrNiMo17-12-2, etc.)	T6120	140 - 240
		T6130	100 - 200
		AH630	90 - 190
		AH645	70 - 150
	Ferritic / Martensitic (SUS430/X6Cr17, SUS416/X20Cr13, etc.)	T6120	160 - 280
		T6130	120 - 240
		AH630	110 - 210
		AH645	90 - 170
	Precipitation hardened (SUS630 / X5CrNiCuNb16-4, etc.)	T6120	80 - 150
		T6130	70 - 110
		AH630	60 - 90

Note: See page 9 for more information about grades.

TUNGTURN JET
TUNGALOY

Tools with high-pressure coolant system

TungTurn-Jet's high-pressure coolant forms short chips, and removed heat on the cutting edge extends tool life.

- **Improved productivity** with high-pressure coolant supply:

- Coolant is delivered from nozzle tube on the top of the toolholder to the cutting edge and from the bottom hole to the flank.

- Coolant supplied from two directions reduces flank wear and crater wear, **allowing high-speed machining**.

- **High-pressure coolant on the cutting edge** breaks chips, especially for difficult-to-cut materials, which is hard to achieve with general external coolant supply.

- Reduced crater wear and **increased cutting speed provides highly efficient machining**.

- Up to **200% increase in cutting speed** when machining titanium and heat-resistant alloys

- Up to **100% increase in tool life** when machining alloy steel and stainless steel

TUNG FORCE TURN
ACCELERATED MACHINING

Line up:

TungTurn-Jet with high-pressure coolant system is applied to Tungaloy non-rotating tools:

PCLNR/L and PDJNR/L for general external turning: 25-mm (1.00") square shank for regular ISO inserts and ISO-EcoTurn inserts

ISO-EcoTurn (See page 122)

MiniForce-Turn and J-series for external turning on small lathes: 12-mm (0.5") square shank for WXGU,DXGU, and JXGU inserts

EasyMulti-Cut (See page 193, 199, 200, 201)

TetraForceCut (See page 174)

Lever lock type toolholder, for negative 80deg and 55deg rhombic inserts, with channels for high pressure coolant.

EXTERNAL HOLDERS - FOR GENERAL LATHES

TungTurn-Jet PCLNR/L-CHP

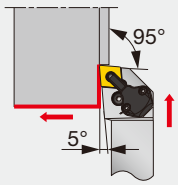

Cutting edge style: **L**

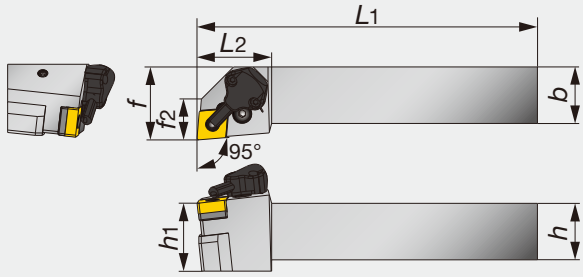

Right hand (R) shown.

Designation	h	b	L1	L2	h1	f	f2	Std. corner radius r_ε	Insert	Torque (N-m)
PCLNR/L2525M0904-CHP (1)	25	25	150	33	25	32	18	0.80	CN**0904**	2.0
PCLNR/L2525M12-CHP	25	25	150	33	25	32	18	0.80	CN**1204**	3.0

(1) ISO-EcoTurn series shown on page 122.

TungTurn-Jet PDJNR/L-CHP

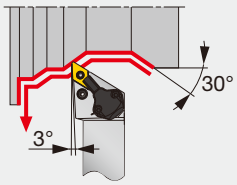

Cutting edge style: **J**

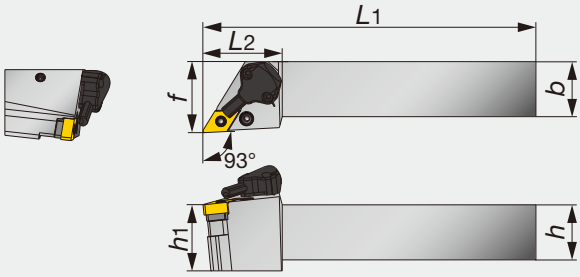

Right hand (R) shown.

Designation	h	b	L1	L2	h1	f	Std. corner radius r_ε	Insert	Torque (N-m)
PDJNR/L2525M1104-CHP (1)	25	25	150	36	25	32	0.80	DN**1104**	2.0
PDJNR/L2525M15-CHP	25	25	150	36	25	32	0.80	DN**1504**	3.0

(1) ISO-EcoTurn series shown on page 122.

SPARE PARTS FOR P-TYPE

Designation	Shim	Clamping Screw	Wrench for clamping screw	Spring pin	Lever	Coolant screw	Wrench for coolant screw
PCLNR/L2525M0904-CHP	LSC317	LCS3	P-2,5	LSP3	LCL33	SRM4X4TL360	P-2
PCLNR/L2525M12-CHP	LSC42	LCS4	P-3	LSP4	LCL4	SRM4X4TL360	P-2
PDJNR/L2525M1104-CHP	ELSD32	LCS3	P-2.5	LSP3	LCL33L	SRM4X4TL360	P-2
PDJNR/L2525M15-CHP	LSD43A	LCS4	P-3	LSP4	LCL4	SRM4X4TL360	P-2

COOLANT SET

Designation	Coolant unit	Mounting screw	Wrench for mounting screw	O-ring
PCLNR/L2525M0904-CHP	CU-CW-CHP	SRM3	T-8F	OR6.4X0.9N
PCLNR/L2525M12-CHP	CU-CW-CHP	SRM3	T-8F	OR6.4X0.9N
PDJNR/L2525M1104-CHP	CU-D-CHP	SRM3	T-8F	OR6.4X0.9N
PDJNR/L2525M15-CHP	CU-D-CHP	SRM3	T-8F	OR6.4X0.9N

Lever lock type toolholder with TungCap connection, for negative inserts, C 80° rhombic, W 80° trigon, D 55° rhombic with channels for high pressure coolant.

EXTERNAL HOLDERS

TungCap C-PCLN-CHP, C-PWLN-CHP, C-PDJN-CHP

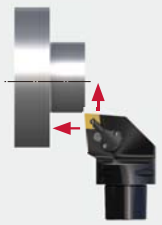

C type shown

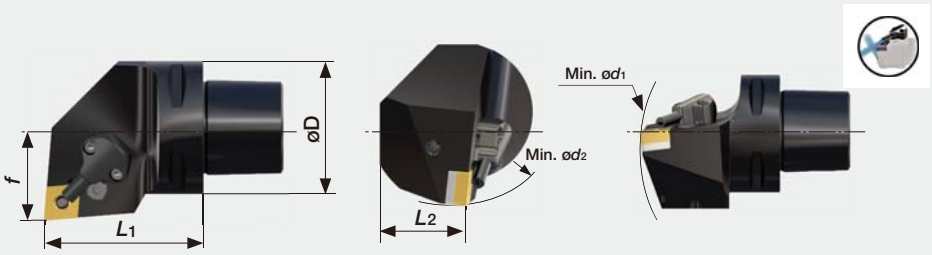

Right hand (R) shown.

Regular ISO

Designation	øD	L1	L2	f	ød1	ød2	Std. corner radius r_ε	Insert
C4PCLNR/L27050-12CHP	40	50	25	27	140	110	0.8	CN**1204**
C5PCLNR/L35060-12CHP	50	60	32	35	165	110	0.8	CN**1204**
C6PCLNR/L45065-12CHP	63	65	41	45	190	125	0.8	CN**1204**
C4PWLNR/L27050-08CHP	40	50	25	27	140	110	0.8	WN**0804**
C6PWLNR/L45065-08CHP	63	65	41	45	190	125	0.8	WN**0804**
C4PDJNR/L27050-15CHP	40	50	25	27	140	110	0.8	DN**1504(06)**
C5PDJNR/L35060-15CHP	50	60	32	35	165	110	0.8	DN**1504(06)**
C6PDJNR/L45065-15CHP	63	65	41	45	190	110	0.8	DN**1504(06)**

ISO-EcoTurn

Designation	øD	L1	L2	f	ød1	ød2	Std. corner radius r_ε	Insert
C4PCLNR/L27050-0904CHP	40	50	25	27	140	110	0.8	CN**0904**
C6PCLNR/L45065-0904CHP	63	65	41	45	190	125	0.8	CN**0904**
C4PWLNR/L27050-0604CHP	40	50	25	27	140	110	0.8	WN**0604**
C6PWLNR/L45065-0604CHP	63	65	41	45	190	125	0.8	WN**0604**
C4PDJNR/L27050-1104CHP	40	50	25	27	140	110	0.8	DN**1104**
C6PDJNR/L45065-1104CHP	63	65	41	45	190	110	0.8	DN**1104**

SPARE PARTS FOR P-TYPE

Designation	Shim	Clamping Screw	Wrench for clamping screw	Spring pin	Lever
C*PCLNR/L...-12CHP	LSC42	LCS4	P-3	LSP4	LCL4
C*PWLNR/L...-08CHP	LSW42BL	LCS4	P-3	LSP4	LCL4
C*PDJNR/L...-15CHP	LSD43A	LCS4	P-3	LSP4	LCL4
C*PCLNR/L...0904CHP	LSC317	LCS3	P-2.5	LSP3	LCL33
C*PWLNR/L...0604CHP	LSW312	LCS3	P-2.5	LSP3	LCL3
C*PDJNR/L...1104CHP	ELSD32	LCS3	P-2.5	LSP3	LCL33L

COOLANT SET

Designation	Coolant unit	Mounting screw	Wrench for mounting screw	O-ring
C*PCLNR/L...CHP	CU-CW-CHP	SRM3	T-8F	OR6.4X0.9N
C*PWLNR/L...CHP	CU-CW-CHP	SRM3	T-8F	OR6.4X0.9N
C*PDJLNR/L...CHP	CU-D-CHP	SRM3	T-8F	OR6.4X0.9N

Screw-on toolholder without offset with 93deg approach angle, for DXGU inserts, with channels for high pressure coolant.

EXTERNAL HOLDERS - FOR SMALL LATHES

TungTurn-Jet JSDJ2XR/L-CHP

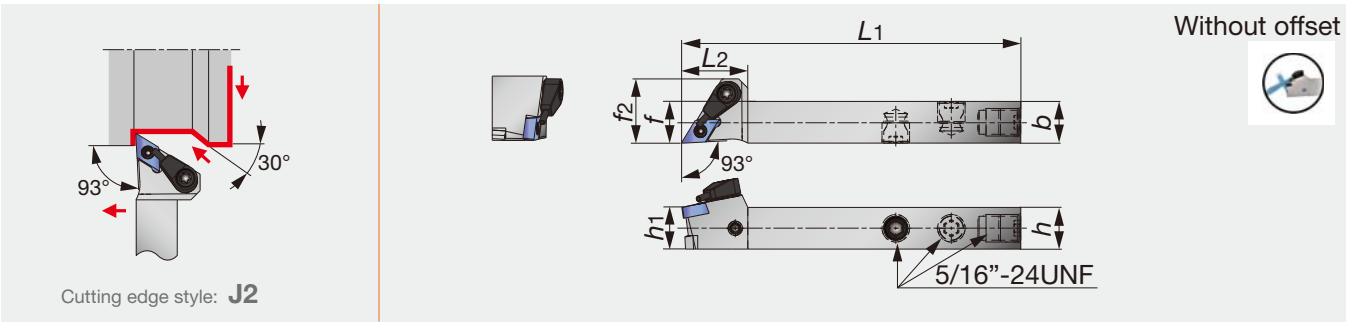

Right hand (R) shown.

Designation	*h*	*b*	*L*1	*L*2	*h*1	*f*	*f*2	Std. corner radius r_ε	Insert	Torque (N-m)
JSDJ2XR/L1212F07-CHP	12	12	85	19	12	12	18.5	0.20	DXGU0703**L/R	0.9

Note: Right hand toolholders (R) are used with left hand inserts (L)
Left hand toolholders (L) are used with right hand inserts (R)



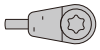

SPARE PARTS FOR J-TYPE

Designation	Screw	Wrench	Coolant unit
JSDJ2XR/L1212F07-CHP	SR34-514	T-7F	S-CU-CHP

Screw-on toolholder without offset with 95deg approach angle, for WXGU inserts, with channels for high pressure coolant.

EXTERNAL HOLDERS - FOR SMALL LATHES

TungTurn-Jet JSWL2XR/L-CHP

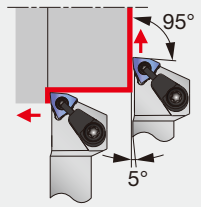

Cutting edge style: **L2**

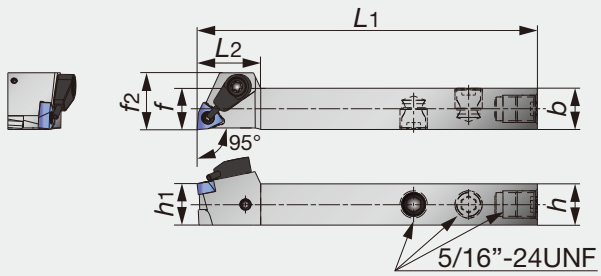

Without offset

Right hand (R) shown.

Designation	*h*	*b*	*L*1	*L*2	*h*1	*f*	*f*2	Std. corner radius r_ε	Insert	Torque (N-m)
JSWL2XR/L1212F04-CHP	12	12	85	18	12	12	16.5	0.20	WXGU0403**L/R	0.9

Note: Right hand toolholders (R) are used with left hand inserts (L)
Left hand toolholders (L) are used with right hand inserts (R)



SPARE PARTS FOR J-TYPE

Designation	Screw	Wrench	Coolant unit
JSWL2XR/L1212F04-CHP	SR34-514	T-7F	S-CU-CHP

Screw-on toolholder without offset with 93deg approach angle, for VXGU inserts, with channels for high pressure coolant.

EXTERNAL HOLDERS - FOR SMALL LATHES

TungTurn-Jet JSVJ2XR/L-CHP

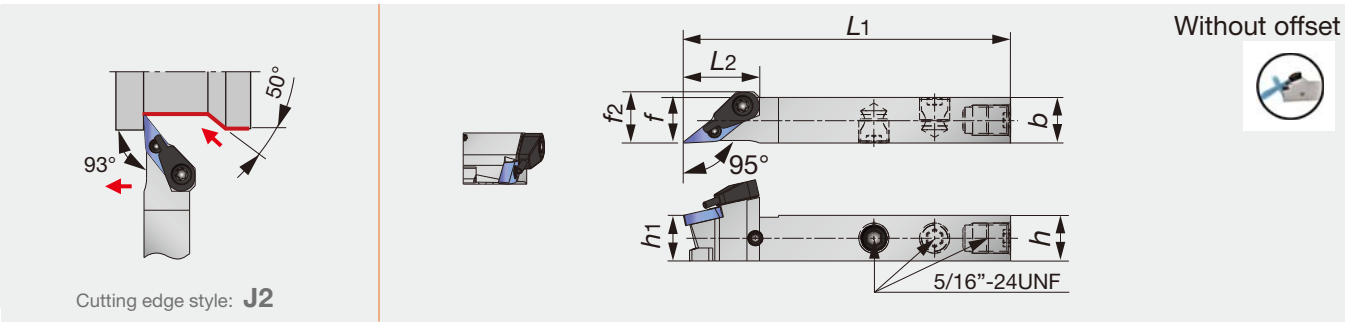

Right hand (R) shown.

Designation	h	b	L1	L2	h1	f	f2	Std. corner radius r_ε	Insert	Torque (N-m)
JSVJ2XR/L1212F09-CHP	12	12	85	17.5	12	12	13.5	0.2	VXGU09T2***	0.9

Note: Right hand toolholders (R) are used with left hand inserts (L)
Left hand toolholders (L) are used with right hand inserts (R)

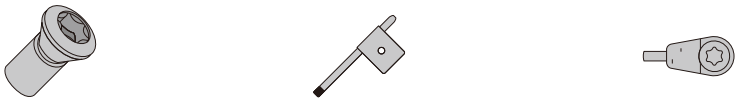

SPARE PARTS FOR J-TYPE

Designation	Screw	Wrench	Coolant unit
JSVJ2XR/L1212F09-CHP	SR34-508	T-7F	S-CU-CHP

"J-Series" screw-on toolholder without offset with 93 deg approach angle, for positive 55 deg rhombic inserts, with channels for high pressure coolant.

EXTERNAL HOLDERS - FOR SMALL LATHES

TungTurn-Jet JSDJ2CR/L-CHP

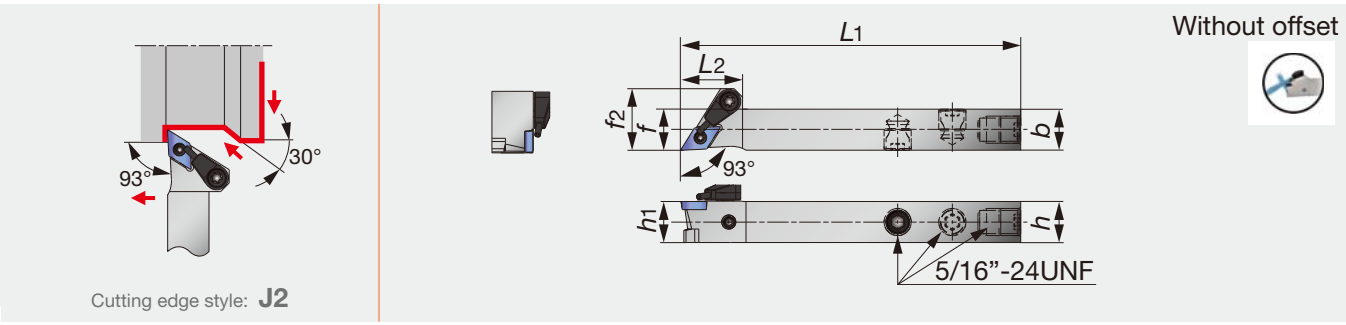

Right hand (R) shown.

Designation	*h*	*b*	*L*1	*L*2	*h*1	*f*	*f*2	Std. corner radius r_ε	Insert	Torque (N-m)
JSDJ2CR/L1212F07-CHP	12	12	85	18	12	12	18	0.20	DC**0702**	0.9
JSDJ2CR/L1212F11-CHP	12	12	85	19	12	12	20.5	0.20	DC**11T3**	0.9



SPARE PARTS FOR J-TYPE

Designation	Screw	Wrench	Coolant unit
JSDJ2CR/L1212F07-CHP	CSTB-2.5	T-8F	S-CU-CHP
JSDJ2CR/L1212F11-CHP	CSTB-4SD	T-8F	S-CU-CHP

"J-Series" screw-on toolholder without offset with 93 deg approach angle, for positive 35 deg rhombic inserts, with channels for high pressure coolant.

EXTERNAL HOLDERS - FOR SMALL LATHES

TungTurn-Jet JSVJ2BR/L-CHP

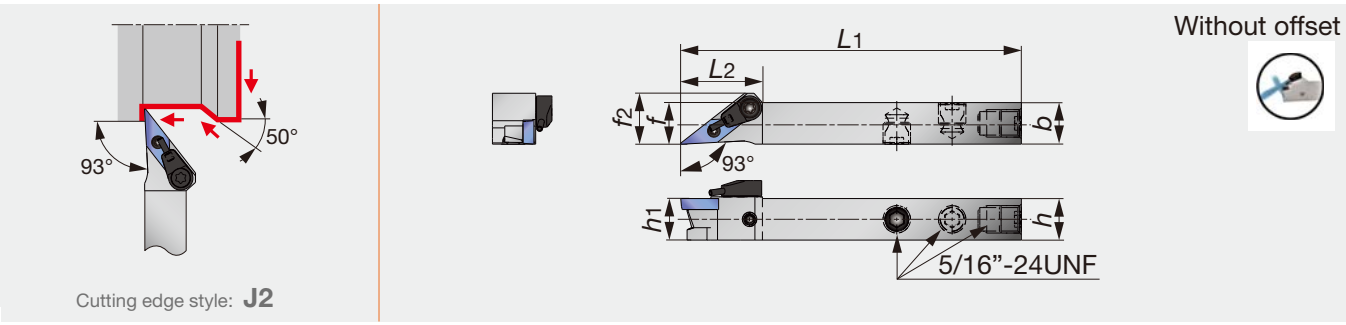

Right hand (R) shown.

Designation	h	b	L1	L2	h1	f	f2	Std. corner radius r_ε	Insert	Torque (N-m)
JSVJ2BR/L1212F11-CHP	12	12	85	23.6	12	12	14.7	0.20	VB**1103**	1.2

SPARE PARTS FOR J-TYPE



Designation	Screw	Wrench	Coolant unit
JSVJ2BR/L1212F11-CHP	CSTB-2.5	T-8F	S-CU-CHP

PARTS FOR COOLANT HOSE

For general lathes

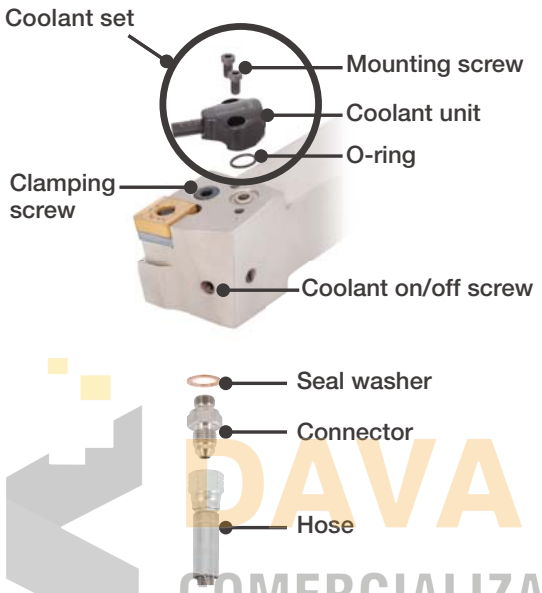

For small lathes

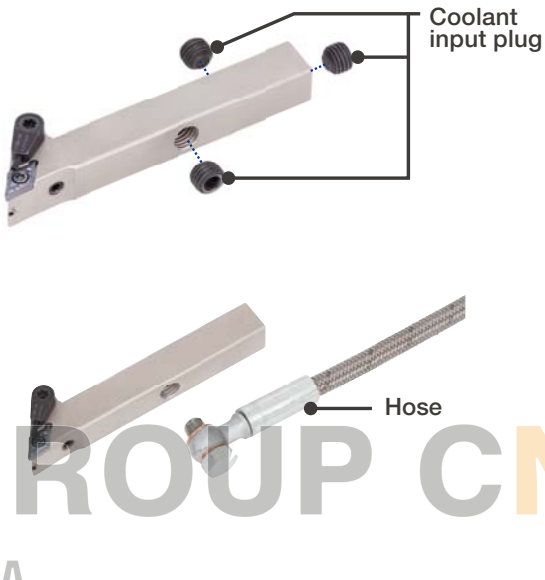

PARTS FOR COOLANT HOSE

Connecting hose

Fig. 1

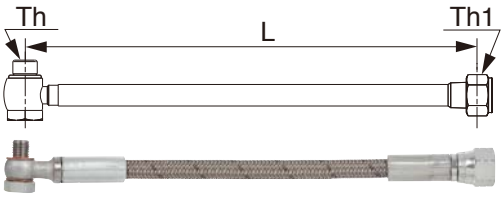

Fig. 2

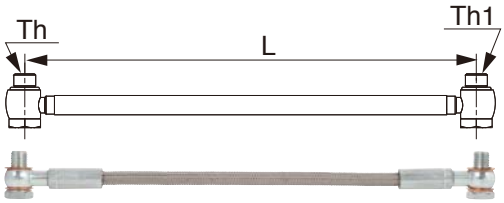

Designation	Length L	Threading size Th	Threading size Th1	Max. pressure (Mpa)	Fig.
CHP-HOSE-G1/8-7/16-200BS	200	G1/8"-28 BSPP	7/16"-20 UNF	26	1
CHP-HOSE-G1/8-7/16-250BS	250	G1/8"-28 BSPP	7/16"-20 UNF	26	1
CHP-HOSE-5/16-7/16-200BS	200	5/16"-24UNF	7/16"-20 UNF	20	1
CHP-HOSE-5/16-G1/8-200BS	200	5/16"-24UNF	G1/8"-28 BSPP	20	1
CHP-HOSE-G1/8-G1/8-200BB	200	G1/8"-28 BSPP	G1/8"-28 BSPP	26	2
CHP-HOSE-G1/8-G1/8-250BB	250	G1/8"-28 BSPP	G1/8"-28 BSPP	26	2

Connector

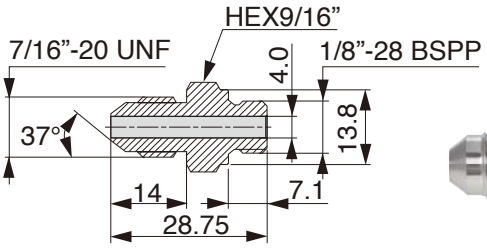

Designation
CHP-NIPPLE-G1/8-7/16UNF

Seal washer

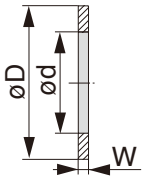

Designation	øD	ød	W
CHP-COPPER-SEAL1/8	15	8	1
CHP-COPPER-SEAL5/16	11	8	1
CHP-COPPER-SEAL5/16-2.5	11	8	2.5

Connector for small lathe with seal washer

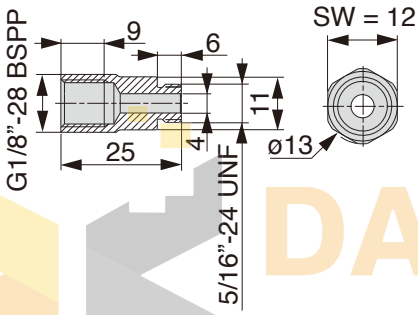

Designation
CHP-CONECTOR/5/16-G1/8

TINYMINITURN
TUNGALOY

Solid carbide small tools for turning small diameters with high accuracy

TinyMini-Turn's extra-fine cutting edge offers high-precision machining in various internal operations starting from ø0.6 mm (0.024") bore diameter.

- **Extra-fine cutting edge**:

- Smooth cutting edge for **high-precision machining** provides fine surface finish and prevents edge chipping

- Solid carbide tools with internal **coolant supplied directly to cutting edge**

- Ground chipbreaker **optimizes chip formation**.

- Ideal sleeve with easy operation

- Sleeve with internal coolant supply

- **Excellent repeatability** of solid bars

- **Stability and reliability** in tool change

- Reduction in inventory cost: both ø4 and ø7 mm (0.157" and 0.028") shanks are applicable for one sleeve

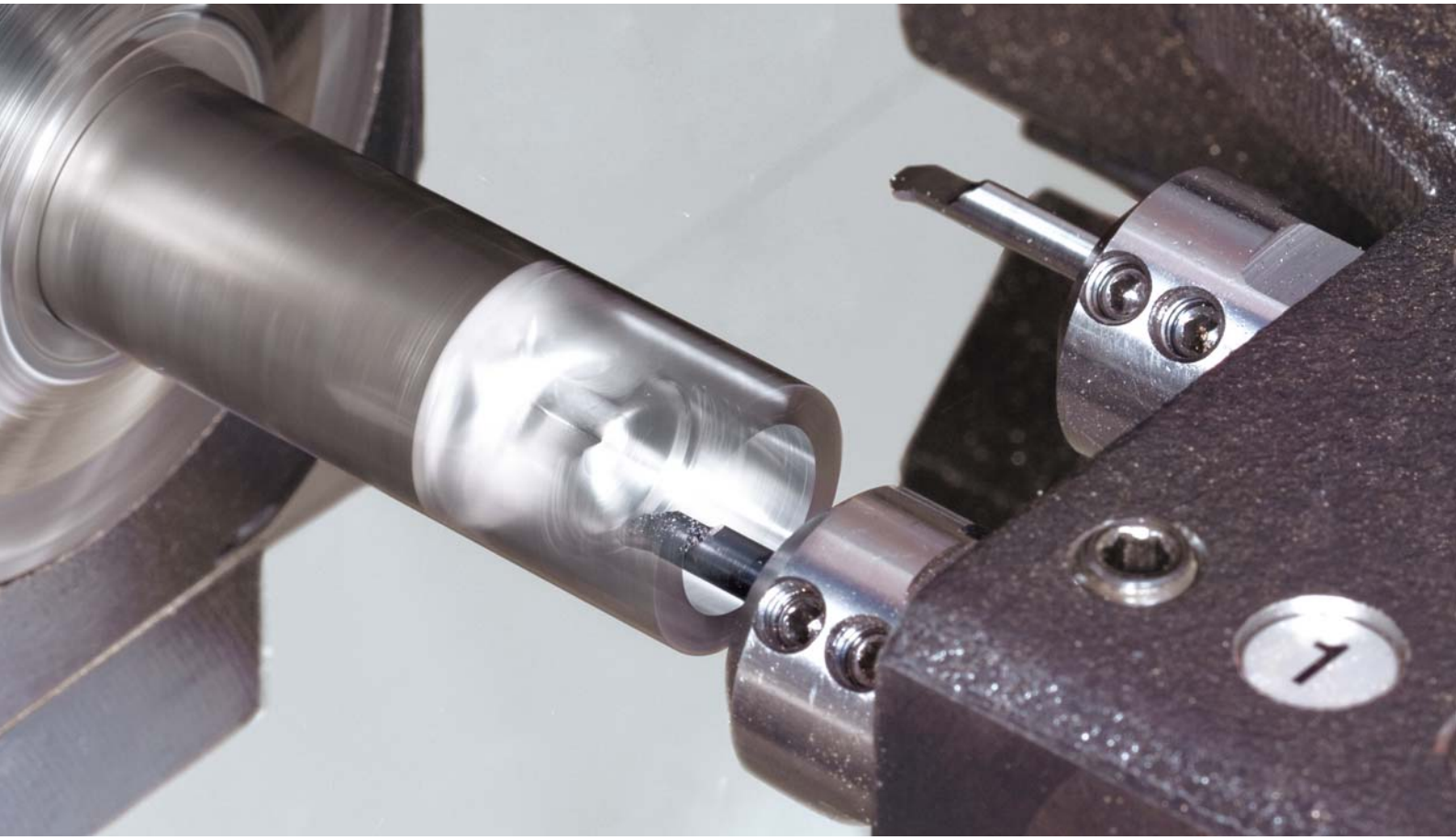

TUNGFORCE TURN
ACCELERATED MACHINING

Line up:

A wide variety of carbide tools for small-part machining, boring, profiling, chamfering, threading, and grooving

2 types of sleeves are available with internal coolant for general applications.

SH730 insert grade:
Stable cutting performance with the combination of exclusive (Ti,Al)N coating and the extremely tough substrate

BORING, PROFILING, CHAMFERING

TinyMini-Turn JBTR/L

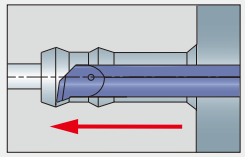

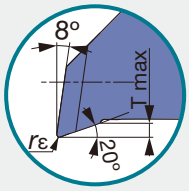

Details of edge

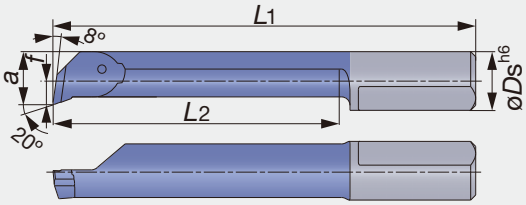

Right hand (R) shown.

Designation	Grade SH730 R	Grade SH730 L	øDm	øDs	f	a	L1	L2	T max	rε +0.05 0
JBTR/L04020004-D006	✓		0.6	4	-	0.5	18.5	2	0.08	0.04
JBTR/L04030004-D006	✓		0.6	4	-	0.5	19.5	3	0.08	0.04
JBTR/L04045005-D010	✓		1	4	-	0.9	21	4.5	0.1	0.05
JBTR/L04065005-D010	✓		1	4	-	0.9	23	6.5	0.1	0.05
JBTR/L04040005-D020	✓		2	4	-	1.7	20.5	4	0.1	0.05
JBTR/L04090005-D020	✓		2	4	-	1.7	25.5	9	0.1	0.05
JBTR/L04140005-D020	✓		2	4	-	1.7	30.5	14	0.1	0.05
JBTR/L04090010-D028	✓	✓	2.8	4	0.6	2.6	25.5	9	0.2	0.10
JBTR/L04150010-D028	✓	✓	2.8	4	0.6	2.6	31.5	15	0.2	0.10
JBTR/L04190010-D028	✓	✓	2.8	4	0.6	2.6	35.5	19	0.2	0.10
JBTR/L04090010-D040	✓	✓	4	4	1.5	3.5	25.5	9	0.3	0.10
JBTR/L04150010-D040	✓	✓	4	4	1.5	3.5	31.5	15	0.3	0.10
JBTR/L04190010-D040	✓	✓	4	4	1.5	3.5	35.5	19	0.3	0.10
JBTR/L04230010-D040	✓		4	4	1.5	3.5	39.5	23	0.3	0.10
JBTR/L04270010-D040	✓		4	4	1.5	3.5	43.5	27	0.3	0.10
JBTR/L07090015-D050	✓	✓	5	7	0.9	4.4	25	9	0.5	0.15
JBTR/L07140015-D050	✓	✓	5	7	0.9	4.4	30	14	0.5	0.15
JBTR/L07190015-D050	✓	✓	5	7	0.9	4.4	35	19	0.5	0.15
JBTR/L07240015-D050	✓	✓	5	7	0.9	4.4	40	24	0.5	0.15
JBTR/L07290015-D050	✓	✓	5	7	0.9	4.4	45	29	0.5	0.15
JBTR/L07340015-D050	✓		5	7	0.9	4.4	50	34	0.5	0.15
JBTR/L07140015-D060	✓	✓	6	7	1.8	5.3	30	14	0.5	0.15
JBTR/L07210015-D060	✓	✓	6	7	1.8	5.3	37	21	0.5	0.15
JBTR/L07240015-D060	✓	✓	6	7	1.8	5.3	40	24	0.5	0.15
JBTR/L07290015-D060	✓	✓	6	7	1.8	5.3	45	29	0.5	0.15
JBTR/L07340015-D060	✓		6	7	1.8	5.3	50	34	0.5	0.15
JBTR/L07410015-D060	✓		6	7	1.8	5.3	57	41	0.5	0.15
JBTR/L07190015-D068	✓	✓	6.8	7	2.8	6.3	35	19	0.6	0.15
JBTR/L07240015-D068	✓		6.8	7	2.8	6.3	40	24	0.6	0.15

✓ : Stocked items

Designation	Grade SH730 R	Grade SH730 L	øDm	øDs	f	a	L1	L2	T max	r_ε $^{+0.05}_{0}$
JBTR/L07290015-D068	✓	✓	6.8	7	2.8	6.3	45	29	0.6	0.15
JBTR/L07340015-D070	✓	✓	7	7	2.8	6.3	50	34	0.6	0.15
JBTR/L07390015-D070	✓		7	7	2.8	6.3	55	39	0.6	0.15
JBTR/L07440015-D070	✓		7	7	2.8	6.3	60	44	0.6	0.15
JBTR/L07490015-D070	✓		7	7	2.8	6.3	65	49	0.6	0.15

✓ : Stocked items

Solid boring bars for boring & chamfering

BORING, CHAMFERING

TinyMini-Turn JBPR

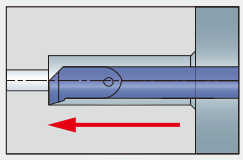

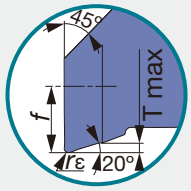

Detail of edge

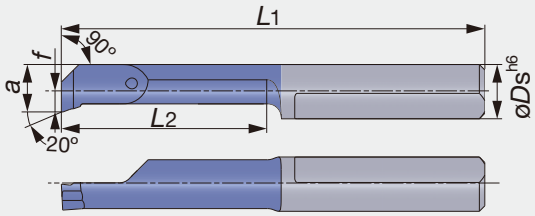

Right hand (R) shown.

Designation	Grade SH730	øDm	øDs	f	a	L1	L2	T max	rε +0.05 0
JBPR04090010-D028	✓	2.8	4	0.6	2.6	25.5	9	0.2	0.10
JBPR04150010-D028	✓	2.8	4	0.6	2.6	31.5	15	0.2	0.10
JBPR04090010-D040	✓	4	4	1.5	3.5	25.5	9	0.3	0.10
JBPR04150010-D040	✓	4	4	1.5	3.5	31.5	15	0.3	0.10
JBPR07140015-D050	✓	5	7	0.9	4.4	30	14	0.5	0.15
JBPR07190015-D050	✓	5	7	0.9	4.4	35	19	0.5	0.15

✓ : Stocked items

Solid boring bars for back boring & chamfering

BACK BORING, CHAMFERING

TinyMini-Turn JBUR

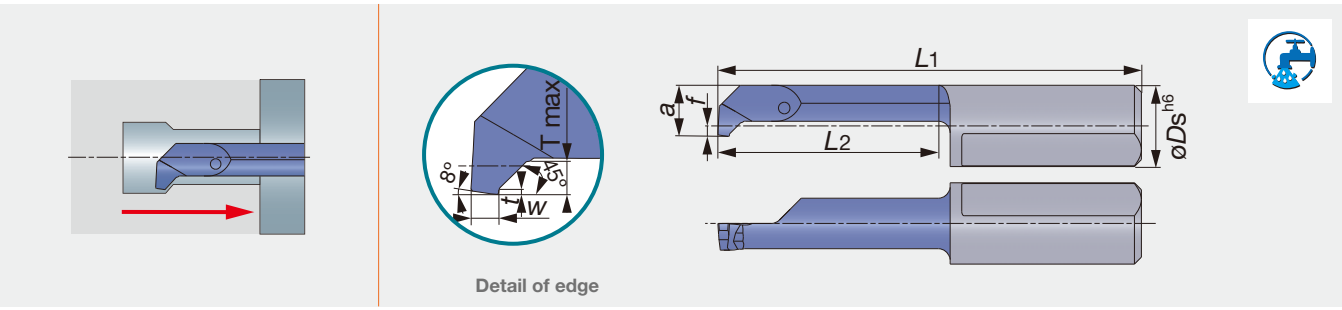

Right hand (R) shown.

Designation	Grade SH730	øDm	øDs	f	a	L1	L2	t	T max	W $^{+0.05}_{0}$
JBUR07140010-D050	✓	5	7	0.9	4.4	30	14	0.2	1	1
JBUR07190010-D050	✓	5	7	0.9	4.4	35	19	0.2	1	1

✓ : Stocked items

Solid boring bars for 45deg chamfering

45° CHAMFERING

TinyMini-Turn JBCR

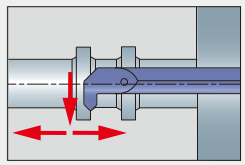

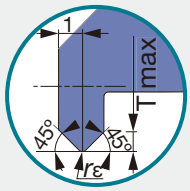

Detail of edge

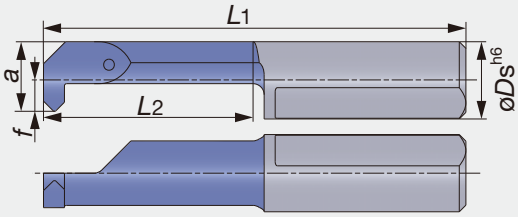

Right hand (R) shown.

Designation	Grade SH730	øDm	øDs	f	a	L1	L2	T max	rε ±0.05
JBCR07140020-D050	✓	5	7	0.9	4.4	30	14	0.7	0.2
JBCR07190020-D050	✓	5	7	0.9	4.4	35	19	0.7	0.2
JBCR07190020-D068	✓	6.8	7	2.8	6.3	35	19	0.7	0.2

✓ : Stocked items

Solid boring bars for back boring

BACK BORING

TinyMini-Turn JBBR

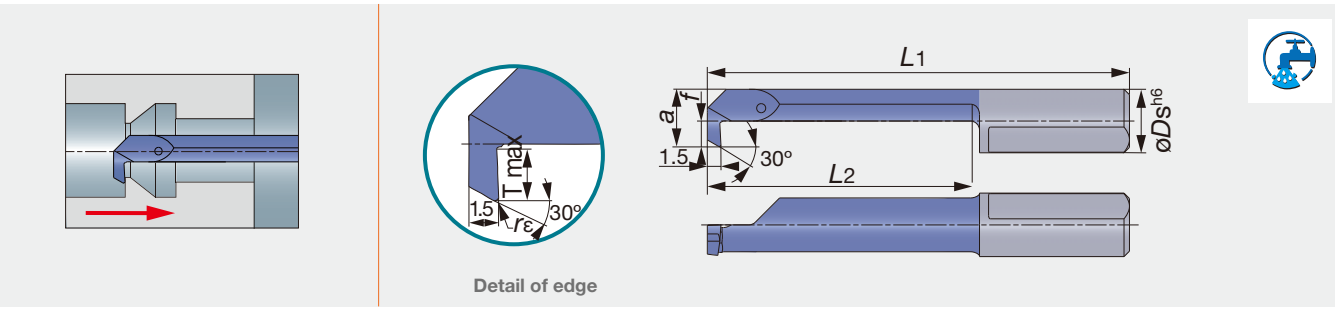

Right hand (R) shown.

Designation	Grade SH730	øDm	øDs	f	a	L1	L2	T max	rε ±0.05
JBBR04140020-D030	✓	3	4	0.6	2.6	30	14	0.5	0.2
JBBR04190020-D030	✓	3	4	0.6	2.6	35	19	0.5	0.2
JBBR04140015-D040	✓	4	4	1.5	3.5	30	14	0.8	0.15
JBBR04240015-D040	✓	4	4	1.5	3.5	40	24	0.8	0.15
JBBR07190020-D050	✓	5	7	0.9	4.4	35	19	1	0.2
JBBR07290020-D050	✓	5	7	0.9	4.4	45	29	1	0.2
JBBR07190020-D060	✓	6	7	1.8	5.3	35	19	1.8	0.2
JBBR07290020-D060	✓	6	7	1.8	5.3	45	29	1.8	0.2
JBBR07190020-D070	✓	7	7	2.8	6.3	35	19	2.5	0.2
JBBR07290020-D070	✓	7	7	2.8	6.3	45	29	2.5	0.2

✓ : Stocked items

Solid boring bars for threading, metric thread

THREADING (METRIC THREAD)

TinyMini-Turn JBIR

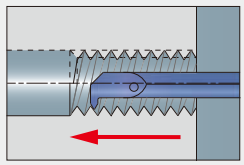

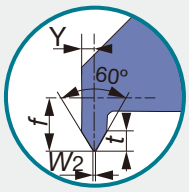

Detail of edge

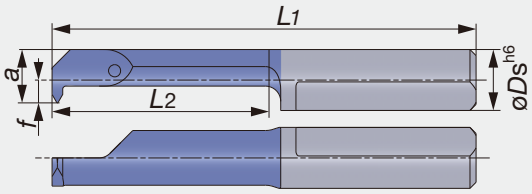

Right hand (R) shown.

Designation	Grade SH730	Pitch	øDm	W_2 $^{0}_{-0.02}$	øDs	f	a	L1	L2	t	Y
JBIR04140050-D040	✓	0.5 - 0.8	4	0.06	4	1.5	3.5	30	14	0.3	0.35
JBIR07140050-D050	✓	0.5 - 1.0	5	0.06	7	0.9	4.4	30	14	0.3	0.35
JBIR07140075-D050	✓	0.75 - 1.0	5	0.09	7	0.9	4.4	30	14	0.4	0.45
JBIR07140100-D048	✓	1.0	4.8	0.12	7	0.9	4.4	30	14	0.6	0.55
JBIR07140100-D060	✓	1.0 - 1.5	6	0.12	7	1.8	5.3	30	14	0.6	0.55
JBIR07140125-D060	✓	1.25 - 1.5	6	0.15	7	1.8	5.3	30	14	0.7	0.65
JBIR07140150-D060	✓	1.5	6	0.18	7	1.8	5.3	30	14	0.8	0.75
JBIR07140150-D070	✓	1.0 - 1.5	7	0.18	7	2.8	6.3	30	14	0.8	0.75

✓ : Stocked items

Solid boring bars for internal grooving

GROOVING

TinyMini-Turn JBGR/L

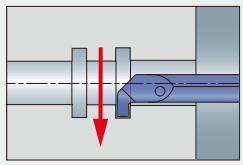

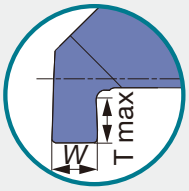

Detail of edge

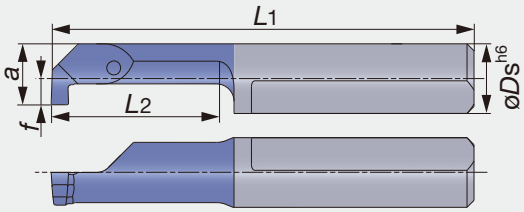

Right hand (R) shown.

Designation	Grade SH730 R	Grade SH730 L	$W^{+0.05}_{0}$	øDm	øDs	f	a	L1	L2	T max
JBGR/L04050050-D020	✓		0.5	2	4	0.2	1.8	21	5	0.4
JBGR/L04100050-D020	✓		0.5	2	4	0.2	1.8	26	10	0.4
JBGR/L04050070-D030	✓		0.7	3	4	0.7	2.7	21	5	0.6
JBGR/L04100070-D030	✓		0.7	3	4	0.7	2.7	26	10	0.6
JBGR/L04090100-D040	✓		1	4	4	1.5	3.5	25.5	9	0.8
JBGR/L04150100-D040	✓		1	4	4	1.5	3.5	31.5	15	0.8
JBGR/L07090100-D050	✓		1	5	7	0.9	4.4	25	9	1
JBGR/L07140100-D050	✓		1	5	7	0.9	4.4	30	14	1
JBGR/L07090150-D050	✓		1.5	5	7	0.9	4.4	25	9	1
JBGR/L07140150-D050	✓		1.5	5	7	0.9	4.4	30	14	1
JBGR/L07090200-D050	✓		2	5	7	0.9	4.4	25	9	1
JBGR/L07190200-D050	✓		2	5	7	0.9	4.4	35	19	1
JBGR/L07090100-D060	✓	✓	1	6	7	1.8	5.3	25	9	1.8
JBGR/L07140100-D060	✓		1	6	7	1.8	5.3	30	14	1.8
JBGR/L07210100-D060	✓		1	6	7	1.8	5.3	37	21	1.8
JBGR/L07290100-D060	✓		1	6	7	1.8	5.3	45	29	1.8
JBGR/L07090150-D060	✓	✓	1.5	6	7	1.8	5.3	25	9	1.8
JBGR/L07140150-D060	✓		1.5	6	7	1.8	5.3	30	14	1.8
JBGR/L07210150-D060	✓		1.5	6	7	1.8	5.3	37	21	1.8
JBGR/L07240150-D060	✓		1.5	6	7	1.8	5.3	40	24	1.8
JBGR/L07290150-D060	✓		1.5	6	7	1.8	5.3	45	29	1.8
JBGR/L07090200-D060	✓		2	6	7	1.8	5.3	25	9	1.8
JBGR/L07140200-D060	✓		2	6	7	1.8	5.3	30	14	1.8
JBGR/L07210200-D060	✓		2	6	7	1.8	5.3	37	21	1.8
JBGR/L07240200-D060	✓		2	6	7	1.8	5.3	40	24	1.8
JBGR/L07290200-D060	✓		2	6	7	1.8	5.3	45	29	1.8
JBGR/L07090100-D068	✓		1	6.8	7	2.7	6.2	25	9	2.5
JBGR/L07140100-D068	✓		1	6.8	7	2.7	6.2	30	14	2.5

✓ : Stocked items

Designation	Grade SH730 R	Grade SH730 L	$W^{+0.05}_{0}$	øDm	øDs	f	a	L1	L2	T max
JBGR/L07210100-D068	✓		1	6.8	7	2.7	6.2	37	21	2.5
JBGR/L07090150-D068	✓		1.5	6.8	7	2.7	6.2	25	9	2.5
JBGR/L07140150-D068	✓		1.5	6.8	7	2.7	6.2	30	14	2.5
JBGR/L07210150-D068	✓		1.5	6.8	7	2.7	6.2	37	21	2.5
JBGR/L07290150-D068	✓		1.5	6.8	7	2.7	6.2	45	29	2.5
JBGR/L07090200-D068	✓		2	6.8	7	2.7	6.2	25	9	2.5
JBGR/L07140200-D068	✓	✓	2	6.8	7	2.7	6.2	30	14	2.5
JBGR/L07210200-D068	✓		2	6.8	7	2.7	6.2	37	21	2.5
JBGR/L07250200-D068	✓		2	6.8	7	2.7	6.2	40	25	2.5
JBGR/L07290200-D068	✓		2	6.8	7	2.7	6.2	45	29	2.5

✓ : Stocked items

- Corner radius : less than 0.01 mm.

Solid boring bars for grooving & profiling, full radius type

GROOVING, PROFILING (FULL RADIUS TYPE)

TinyMini-Turn JBRR

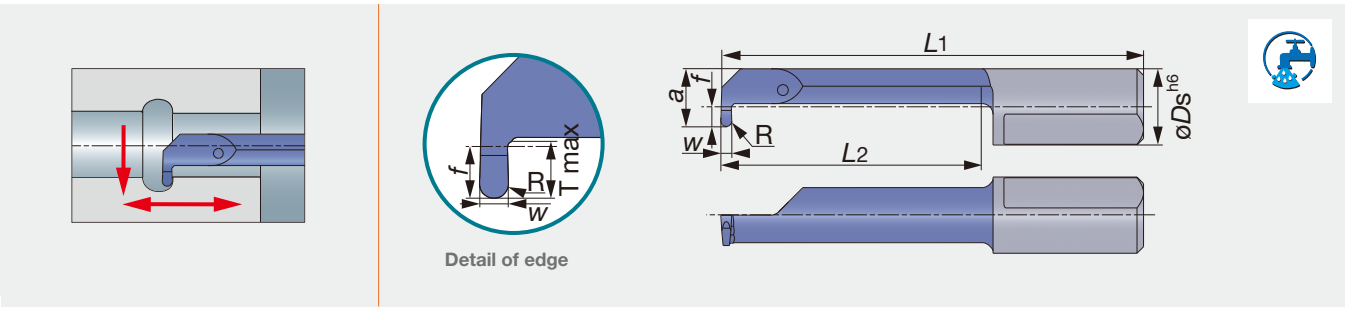

Right hand (R) shown.

Designation	Grade SH730	$W^{+0.05}_{0}$	øDm	øDs	f	a	L1	L2	T max	R
JBRR07190050-D050	✓	1	5	7	0.9	4.4	35	19	1	0.5
JBRR07240050-D060	✓	1	6	7	1.8	5.3	40	24	1.8	0.5
JBRR07290050-D068	✓	1	6.8	7	2.8	6.3	45	29	2.5	0.5

✓ : Stocked items

Solid boring bars for face grooving along bore

FACE GROOVING

TinyMini-Turn JBFR/L

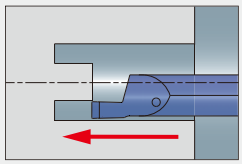

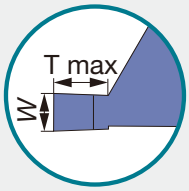

Detail of edge

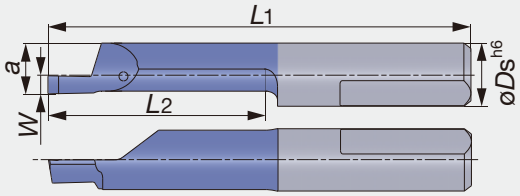

Right hand (R) shown.

Designation	Grade SH730 R	Grade SH730 L	$W^{+0.05}_{0}$	øDm	øDs	a	L1	L2	T max
JBFR/L07110100-D060	✓		1	6	7	5.2	26	10	1.5
JBFR/L07110150-D060	✓		1.5	6	7	5.2	26	10	2
JBFR/L07110200-D060	✓		2	6	7	5.2	26	10	3
JBFR/L07110100-D080	✓		1	8	7	5.9	27	11	1.5
JBFR/L07110150-D080	✓		1.5	8	7	5.9	27	11	2.5
JBFR/L07110200-D080	✓		2	8	7	5.9	27	11	3
JBFR/L07110250-D080	✓		2.5	8	7	5.9	27	11	3.5
JBFR/L07110300-D080	✓		3	8	7	5.9	27	11	3.5
JBFR/L07200200-D080	✓		2	8	7	5.9	36	20	3
JBFR/L07210150-D080	✓	✓	1.5	8	7	5.9	36	21	2.5
JBFR/L07210200-D080	✓		2	8	7	5.9	36	21	3
JBFR/L07210250-D080	✓		2.5	8	7	5.9	36	21	3.5
JBFR/L07210300-D080	✓		3	8	7	5.9	36	21	3.5
JBFR/L07300200-D080	✓	✓	2	8	7	5.9	46	30	3
JBFR/L07300300-D080	✓		3	8	7	5.9	46	30	3.5
JBFR/L07200250-D150	✓		2.5	15	7	5.9	36	20	20
JBFR/L07200300-D150	✓		3	15	7	5.9	36	20	20
JBFR/L07300300-D150	✓		3	15	7	5.9	46	30	30

✓ : Stocked items

Solid boring bars for face grooving along shaft

FACE GROOVING (FOR MACHINING SHAFT)

TinyMini-Turn JBSR

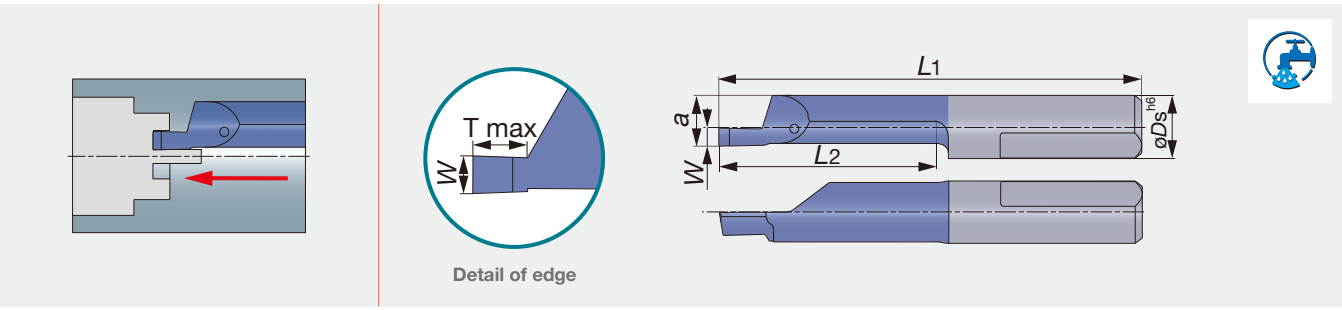

Right hand (R) shown.

Designation	Grade SH730	$W^{+0.05}_{0}$	øDm	øDs	a	L1	L2	T max
JBSR07200200-D060	✓	2	6	7	5.2	36	20	4

✓ : Stocked items

Sleeve with double and clamping two different size carbide shank with coolant supply

SLEEVE FOR CLAMPING TWO DIFFERENT SHANK SIZE

TinyMini-Turn JBBS

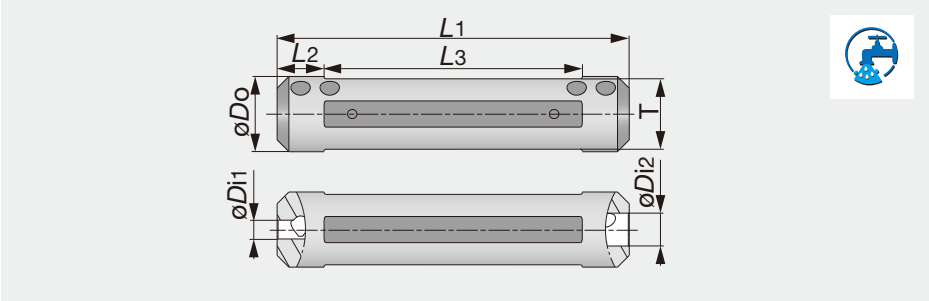

Designation	øDo	øDi1	øDi2	L1	L2	L3	T
JBBS12-4-4	12	4	4	75	10	55	10.3
JBBS127-4-4	12.7	4	4	76.2	10	56.2	11.6
JBBS14-4-4	14	4	4	75	10	55	12
JBBS159-4-7	15.875	4	7	76.2	10	56.2	14
JBBS16-4-7	16	4	7	75	10	55	15
JBBS19-4-7	19.05	4	7	89	10	69	17.2
JBBS20-4-7	20	4	7	90	10	70	18
JBBS22-4-7	22	4	7	90	10	70	20
JBBS25-4-7	25	4	7	100	10	80	23
JBBS254-4-7	25.4	4	7	90	10	70	23.4

SPARE PARTS

Designation	Clamping screw	Wrench
JBBS12-4-4	SSHM5-4PF-S	P-2.5
JBBS14-4-4	SSHM5-4PF-S	P-2.5
JBBS127-4-4	SSHM5-6PF-S	P-2.5
JBBS...-4-7	SSHM5-6PF-S	P-2.5

Single and sleeve with external coolant insert

SLEEVE WITH EXTERNAL COOLANT INLET

TinyMini-Turn JBBS-C

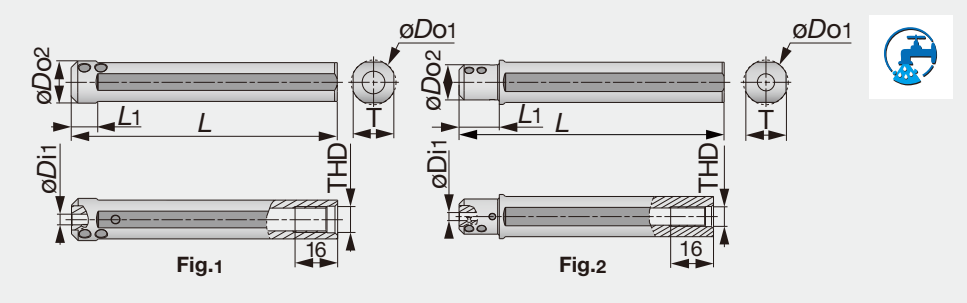

Designation	øDo1	øDo2	øDi1	L	L1	T	THD	Fig
JBBS159-4-L100C	15.875	15.875	4	100	10	14.58	R1/8	1
JBBS159-7-L100C	15.875	15.875	7	100	10	14.58	R1/8	1
JBBS16-4-L100C	16	16	4	100	10	15	R1/8	1
JBBS16-7-L100C	16	16	7	100	10	15	R1/8	1
JBBS19-4-L100C	19.05	17.5	4	100	20	17.2	R1/8	2
JBBS19-7-L100C	19.05	17.5	7	100	20	17.2	R1/8	2
JBBS20-4-L100C	20	17.5	4	100	20	18	R1/8	2
JBBS20-7-L100C	20	17.5	7	100	20	18	R1/8	2
JBBS22-4-L100C	22	17.5	4	100	20	20	R1/8	2
JBBS22-7-L100C	22	17.5	7	100	20	20	R1/8	2
JBBS25-4-L100C	25	18	4	100	23	23	R1/8	2
JBBS25-7-L100C	25	18	7	100	23	23	R1/8	2
JBBS254-4-L100C	25.4	18	4	100	23	23.4	R1/8	2
JBBS254-7-L100C	25.4	18	7	100	23	23.4	R1/8	2

SPARE PARTS

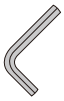

Designation	Clamping screw	Wrench
JBBS...-4-L100C	SSHM5-6PF-S	P-2.5
JBBS...-7-L100C	SSHM5-4PF-S	P-2.5

STANDARD CUTTING CONDITIONS

Boring, profiling, chamfering, back boring

ISO	Workpiece materials	Grade	Cutting speed *Vc* (m/min)	Feed *f* (mm/rev)
P	Low carbon steels (C15, C20 etc.)	SH730	40 - 140	0.01 - 0.08 *
	Carbon steels, Alloy steels (C55, 42CrMoS4 etc.)	SH730	40 - 140	0.01 - 0.08 *
	Prehardened steels (NAK80, PX5 etc.)	SH730	40 - 140	0.01 - 0.08 *
M	Stainless steels (X5CrNi18-9, X5CrNiMo17-12-2 etc)	SH730	40 - 140	0.01 - 0.08 *
K	Grey cast irons (250, 300 etc.)	SH730	30 - 100	0.01 - 0.08 *
	Ductile cast irons (400-15, 600-3 etc.)	SH730	30 - 100	0.01 - 0.08 *
N	Aluminium alloys, copper alloys Si < 12%	SH730	90 - 200	0.01 - 0.08 *
S	Titanium alloys (Ti-6Al-4V, etc.)	SH730	30 - 100	0.01 - 0.08 *
	Superalloys (Inconel718, etc.)	SH730	30 - 100	0.01 - 0.08 *

* JBTR/L04020004-D006, JBTR/L04030004-D006
Max. f = 0.01 mm/rev

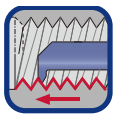

Threading (metric thread)

ISO	Workpiece materials	Grade	Cutting speed *Vc* (m/min)	Number of passes Pitch (mm) 0.5	0.75	1	1.25	1.5
P	Low carbon steels (C15, C20 etc.)	SH730	40 - 140	6 - 8	8 - 10	10 - 12	12 - 15	15 - 18
	Carbon steels, Alloy steels (C55, 42CrMoS4 etc.)	SH730	40 - 140	6 - 8	8 - 10	10 - 12	12 - 15	15 - 18
	Prehardened steels (NAK80, PX5 etc.)	SH730	40 - 140	6 - 8	8 - 10	10 - 12	12 - 15	15 - 18
M	Stainless steels (X5CrNi18-9, X5CrNiMo17-12-2 etc)	SH730	40 - 140	8	10	12	15	18
K	Grey cast irons (250, 300 etc.)	SH730	30 - 100	7	9	12	14	17
	Ductile cast irons (400-15, 600-3 etc.)	SH730	30 - 100	7	9	12	14	17
N	Aluminium alloys, copper alloys Si < 12%	SH730	90 - 200	6	8	10	12	15

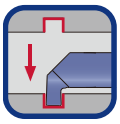

Internal grooving

ISO	Workpiece materials	Grade	Cutting speed *Vc* (m/min)	Feed *f* (mm/rev)
P	Low carbon steels (C15, C20 etc.)	SH730	40 - 140	0.01 - 0.03
	Carbon steels, Alloy steels (C55, 42CrMoS4 etc.)	SH730	40 - 140	0.01 - 0.03
	Prehardened steels (NAK80, PX5 etc.)	SH730	40 - 140	0.01 - 0.03
M	Stainless steels (X5CrNi18-9, X5CrNiMo17-12-2 etc)	SH730	40 - 140	0.01 - 0.03
K	Grey cast irons (250, 300 etc.)	SH730	30 - 100	0.01 - 0.03
	Ductile cast irons (400-15, 600-3 etc.)	SH730	30 - 100	0.01 - 0.03
N	Aluminium alloys, copper alloys Si < 12%	SH730	90 - 200	0.01 - 0.03
S	Titanium alloys Ti-6Al-4V etc.	SH730	30 - 100	0.01 - 0.03
	Superalloys (Inconel718, etc.)	SH730	30 - 100	0.01 - 0.03

Face grooving

ISO	Workpiece materials	Grade	Cutting speed *Vc* (m/min)	Feed *f* (mm/rev)
P	Low carbon steels (C15, C20 etc.)	SH730	40 - 140	0.01 - 0.05
	Carbon steels, Alloy steels (C55, 42CrMoS4 etc.)	SH730	40 - 140	0.01 - 0.05
	Prehardened steels (NAK80, PX5 etc.)	SH730	40 - 140	0.01 - 0.05
M	Stainless steels (X5CrNi18-9, X5CrNiMo17-12-2 etc)	SH730	40 - 140	0.01 - 0.05
K	Grey cast irons (250, 300 etc.)	SH730	30 - 100	0.01 - 0.05
	Ductile cast irons (400-15, 600-3 etc.)	SH730	30 - 100	0.01 - 0.05
N	Aluminium alloys, copper alloys Si < 12%	SH730	90 - 200	0.01 - 0.05
S	Titanium alloys Ti-6Al-4V etc.	SH730	30 - 100	0.01 - 0.05
	Superalloys (Inconel718, etc.)	SH730	30 - 100	0.01 - 0.05

Machining grooves with accurate width and surface finish is possible only if the chips are controlled in its confined groove width; and managing the chips in such narrow space is a big challenge. The **TunGForce GrooveLine** provides solutions to this challenge with its advanced and unique insert **Geometries** assimilated to the newest products. **TunGForce** Groove assures not only great cutting performance but also **Accelerated Machining** to achieve economic efficiency and reliability.

GrooveLine

TETRAFORCE CUT
TUNGALOY

Durable and economical tool for grooving and parting-off

TetraForce-Cut is an innovative solution for grooving. Ground insert clamps into uniquely designed pocket, providing high insert stability as well as repeatability.

- Ground insert with **4 cutting edges** for economical machining:

- One type of the insert can be used with both right- and left-hand toolholders.

- **Uniquely designed insert pocket** protects unused corners from unexpected damages:

- **Unique clamping system** provides **high insert stability** in cutting and assures **accurate repeatability**.

- Insert screw can be operated from both front and rear sides.

TUNGFORCE GROOVE
ACCELERATED MACHINING

Line up:

TetraForceCut insert features a well-designed chipbreaker, easily performing smooth cutting with excellent chip control: Regular inserts in square and full-radius shapes for grooving and parting-off: Applicable for the width from 0.5 to 3.18 mm (0.020” to 0.125”)

Grooving depths range from 1.0 to 6.4 mm (0.039” to 0.252”); parting-off diameter 2.0 to 12.8 mm (0.079” to 0.503”)

Toolholders suitable for general machining and small-part machining:
Shank: 10 to 25 mm (0.375”to 1.00”), which covers various machining needs

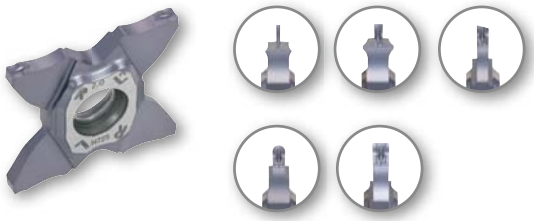

TCS27

TCM27

Precision grooving and parting off insert with 4 cutting edges

INSERTS - FOR GROOVING AND PARTING OFF

TetraForce-Cut TCS27

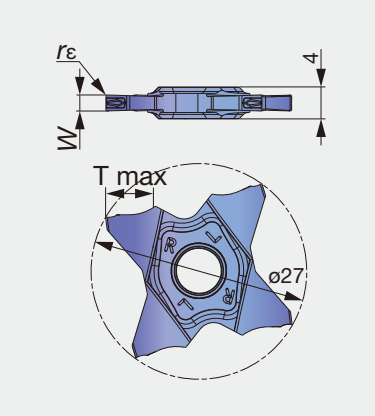

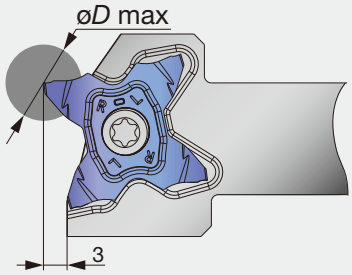

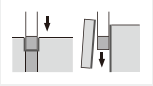

Designation	Grade AH725	W ± 0.02	rε	T max	øD max	Relation of groove depth (T) and Max. diameter (øD max)											
						T≤1.0	T≤2.0	T≤3.0	T≤3.5	T≤4.0	T≤4.5	T≤5.0	T≤5.5	T≤5.7	T≤6.0	T≤6.2	T≤6.4
TCS27-050-000	✓	0.50	0.00	1.0	2.0	∞	-	-	-	-	-	-	-	-	-	-	-
TCS27-050-004	✓	0.50	0.04	2.5	5.0	∞	∞	-	-	-	-	-	-	-	-	-	-
TCS27-075-010	✓	0.75	0.10	2.5	5.0	∞	∞	-	-	-	-	-	-	-	-	-	-
TCS27-080-000	✓	0.80	0.00	1.6	3.2	∞	-	-	-	-	-	-	-	-	-	-	-
TCS27-100-006	✓	1.00	0.06	3.5	7.0	∞	∞	∞	600	-	-	-	-	-	-	-	-
TCS27-100-010	✓	1.00	0.10	3.5	7.0	∞	∞	∞	600	-	-	-	-	-	-	-	-
TCS27-104-000	✓	1.04	0.00	2.0	4.0	∞	∞	-	-	-	-	-	-	-	-	-	-
TCS27-120-000	✓	1.20	0.00	2.0	4.0	∞	∞	-	-	-	-	-	-	-	-	-	-
TCS27-125-010	✓	1.25	0.10	3.5	7.0	∞	∞	∞	600	-	-	-	-	-	-	-	-
TCS27-125-020	✓	1.25	0.20	3.5	7.0	∞	∞	∞	600	-	-	-	-	-	-	-	-
TCS27-140-000	✓	1.40	0.00	2.0	4.0	∞	∞	-	-	-	-	-	-	-	-	-	-
TCS27-147-000	✓	1.47	0.00	2.5	5.0	∞	∞	-	-	-	-	-	-	-	-	-	-
TCS27-150-010	✓	1.50	0.10	5.7	11.4	∞	∞	∞	600	280	180	130	50	35	-	-	-
TCS27-150-020	✓	1.50	0.20	5.7	11.4	∞	∞	∞	600	280	180	130	50	35	-	-	-
TCS27-157-015	✓	1.57	0.15	3.0	6.0	∞	∞	∞	-	-	-	-	-	-	-	-	-
TCS27-170-010	✓	1.70	0.10	3.0	6.0	∞	∞	∞	-	-	-	-	-	-	-	-	-
TCS27-175-010	✓	1.75	0.10	3.0	6.0	∞	∞	∞	-	-	-	-	-	-	-	-	-
TCS27-175-020	✓	1.75	0.20	3.0	6.0	∞	∞	∞	-	-	-	-	-	-	-	-	-
TCS27-178-018	✓	1.78	0.18	3.0	6.0	∞	∞	∞	-	-	-	-	-	-	-	-	-
TCS27-185-020	✓	1.85	0.20	3.0	6.0	∞	∞	∞	-	-	-	-	-	-	-	-	-
TCS27-196-015	✓	1.96	0.15	3.0	6.0	∞	∞	∞	-	-	-	-	-	-	-	-	-
TCS27-200-010	✓	2.00	0.10	6.4	12.8	∞	∞	∞	600	280	180	130	105	85	60	50	30
TCS27-200-020	✓	2.00	0.20	6.4	12.8	∞	∞	∞	600	280	180	130	105	85	60	50	30
TCS27-222-015	✓	2.22	0.15	3.5	7.0	∞	∞	∞	600	-	-	-	-	-	-	-	-
TCS27-230-020	✓	2.30	0.20	3.5	7.0	∞	∞	∞	600	-	-	-	-	-	-	-	-
TCS27-239-015	✓	2.39	0.15	5.7	11.4	∞	∞	∞	600	280	180	130	50	35	-	-	-
TCS27-247-020	✓	2.47	0.20	5.7	11.4	∞	∞	∞	600	280	180	130	50	35	-	-	-
TCS27-250-010	✓	2.50	0.10	5.7	11.4	∞	∞	∞	600	280	180	130	50	35	-	-	-
TCS27-250-030	✓	2.50	0.30	5.7	11.4	∞	∞	∞	600	280	180	130	50	35	-	-	-
TCS27-270-010	✓	2.70	0.10	6.2	12.4	∞	∞	∞	600	280	180	135	105	95	85	78	-
TCS27-287-020	✓	2.87	0.20	6.2	12.4	∞	∞	∞	600	280	180	135	105	95	85	78	-
TCS27-300-000	✓	3.00	0.00	6.4	12.8	∞	∞	∞	600	280	180	135	105	95	85	78	55
TCS27-300-020	✓	3.00	0.20	6.4	12.8	∞	∞	∞	600	280	180	135	105	95	85	78	55
TCS27-300-030	✓	3.00	0.30	6.4	12.8	∞	∞	∞	600	280	180	135	105	95	85	78	55
TCS27-300-040	✓	3.00	0.40	6.4	12.8	∞	∞	∞	600	280	180	135	105	95	85	78	55
TCS27-315-015	✓	3.15	0.15	6.4	12.8	∞	∞	∞	600	280	180	135	105	95	85	78	68
TCS27-318-020	✓	3.18	0.20	6.4	12.8	∞	∞	∞	600	280	180	135	105	95	85	78	68

Packing Quantity = 5 pcs.
✓ : Stocked items

Precision parting off insert with 4 cutting edges (With frontal lead angle)

INSERTS - FOR PARTING OFF

TetraForce-Cut TCS27-R/L

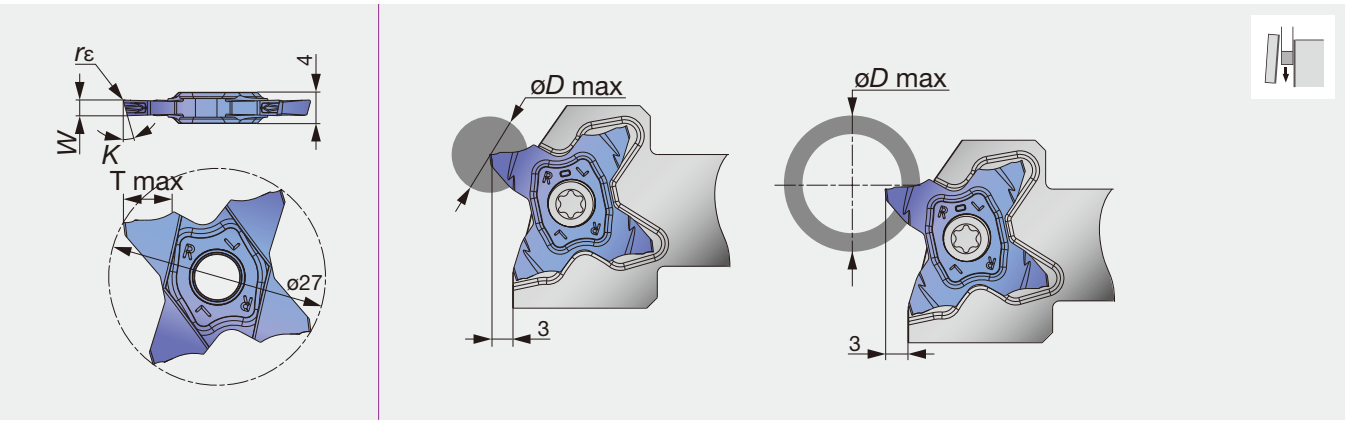

Right hand (R) shown.

Designation	Grade AH725 R	Grade AH725 L	W ± 0.02	rε	T max	K	Max. parting off dia. øD max Solid bar	Max. parting off dia. øD max Tube
TCS27-100-15R/L	✓	✓	1.00	0.06	3.5	15°	7	600
TCS27-150-6R/L	✓	✓	1.50	0.06	5.7	6°	11.4	35
TCS27-150-15R/L	✓	✓	1.50	0.06	5.7	15°	11.4	35
TCS27-200-6R/L	✓	✓	2.00	0.10	6.4	6°	12.8	30
TCS27-200-15R/L	✓	✓	2.00	0.10	6.4	15°	12.8	30

Packing Quantity = 5 pcs.
✓ : Stocked items
Note: See page 9 for more information about grades.

Precision grooving insert with 4 cutting edges (With full radius)

INSERTS - FOR GROOVING AND PROFILING

TetraForce-Cut TCS27-Full R

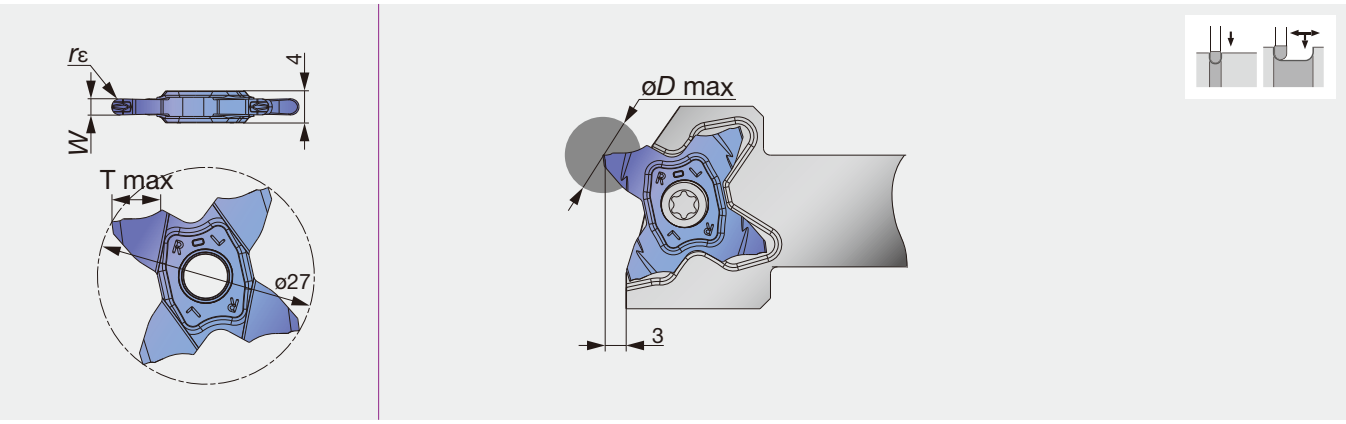

Designation	Grade AH725	W ± 0.02	rε	T max	Relation of groove depth (T) and Max. diameter (øD max)											
					T≤1.0	T≤2.0	T≤3.0	T≤3.5	T≤4.0	T≤4.5	T≤5.0	T≤5.5	T≤5.7	T≤6.0	T≤6.2	T≤6.4
TCS27-157-079	✓	1.57	0.79	3.0	∞	∞	∞	-	-	-	-	-	-	-	-	-
TCS27-200-100	✓	2.00	1.00	3.0	∞	∞	∞	-	-	-	-	-	-	-	-	-
TCS27-239-120	✓	2.39	1.20	5.7	∞	∞	∞	600	280	180	130	50	35	-	-	-
TCS27-300-150	✓	3.00	1.50	6.4	∞	∞	∞	600	280	180	135	105	95	85	78	55

Packing Quantity = 5 pcs.
✓ : Stocked items
Note: See page 9 for more information about grades.

Grooving and parting off insert with 4 cutting edges

INSERTS - FOR GROOVING AND PARTING OFF

TetraForce-Cut TCM27

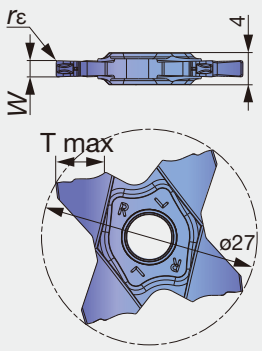

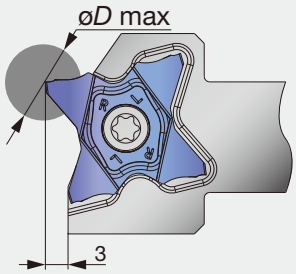

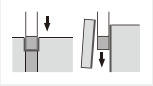

Designation	Grade AH725	W ± 0.02	rε	T max	øD max	Relation of groove depth (T) and Max. diameter (øD max)											
						T≤1.0	T≤2.0	T≤3.0	T≤3.5	T≤4.0	T≤4.5	T≤5.0	T≤5.5	T≤5.7	T≤6.0	T≤6.2	T≤6.4
TCM27-150-010	✓	1.50	0.10	5.7	11.4	∞	∞	∞	600	280	180	130	50	35	-	-	-
TCM27-150-020	✓	1.50	0.20	5.7	11.4	∞	∞	∞	600	280	180	130	50	35	-	-	-
TCM27-157-015	✓	1.57	0.15	3.0	6.0	∞	∞	∞	-	-	-	-	-	-	-	-	-
TCM27-170-010	✓	1.70	0.10	3.0	6.0	∞	∞	∞	-	-	-	-	-	-	-	-	-
TCM27-175-010	✓	1.75	0.10	3.0	6.0	∞	∞	∞	-	-	-	-	-	-	-	-	-
TCM27-175-020	✓	1.75	0.20	3.0	6.0	∞	∞	∞	-	-	-	-	-	-	-	-	-
TCM27-178-018	✓	1.78	0.18	3.0	6.0	∞	∞	∞	-	-	-	-	-	-	-	-	-
TCM27-185-020	✓	1.85	0.20	3.0	6.0	∞	∞	∞	-	-	-	-	-	-	-	-	-
TCM27-196-015	✓	1.96	0.15	3.0	6.0	∞	∞	∞	-	-	-	-	-	-	-	-	-
TCM27-200-010	✓	2.00	0.10	6.4	12.8	∞	∞	∞	600	280	180	130	105	85	60	50	30
TCM27-200-020	✓	2.00	0.20	6.4	12.8	∞	∞	∞	600	280	180	130	105	85	60	50	30
TCM27-222-015	✓	2.22	0.15	3.5	7.0	∞	∞	∞	600	-	-	-	-	-	-	-	-
TCM27-230-020	✓	2.30	0.20	3.5	7.0	∞	∞	∞	600	-	-	-	-	-	-	-	-
TCM27-239-015	✓	2.39	0.15	5.7	11.4	∞	∞	∞	600	280	180	130	50	35	-	-	-
TCM27-247-020	✓	2.47	0.20	5.7	11.4	∞	∞	∞	600	280	180	130	50	35	-	-	-
TCM27-250-010	✓	2.50	0.10	5.7	11.4	∞	∞	∞	600	280	180	130	50	35	-	-	-
TCM27-250-030	✓	2.50	0.30	5.7	11.4	∞	∞	∞	600	280	180	130	50	35	-	-	-
TCM27-270-010	✓	2.70	0.10	6.2	12.4	∞	∞	∞	600	280	180	135	105	95	85	78	-
TCM27-287-020	✓	2.87	0.20	6.2	12.4	∞	∞	∞	600	280	180	135	105	95	85	78	-
TCM27-300-000	✓	3.00	0.00	6.4	12.8	∞	∞	∞	600	280	180	135	105	95	85	78	55
TCM27-300-020	✓	3.00	0.20	6.4	12.8	∞	∞	∞	600	280	180	135	105	95	85	78	55
TCM27-300-030	✓	3.00	0.30	6.4	12.8	∞	∞	∞	600	280	180	135	105	95	85	78	55
TCM27-300-040	✓	3.00	0.40	6.4	12.8	∞	∞	∞	600	280	180	135	105	95	85	78	55
TCM27-315-015	✓	3.15	0.15	6.4	12.8	∞	∞	∞	600	280	180	135	105	95	85	78	68
TCM27-318-020	✓	3.18	0.20	6.4	12.8	∞	∞	∞	600	280	180	135	105	95	85	78	68

Packing Quantity = 5 pcs.
✓ : Stocked items
Note: See page 9 for more information about grades.

INSERTS - FOR GROOVING AND PROFILING

TetraForce-Cut TCM27-Full R

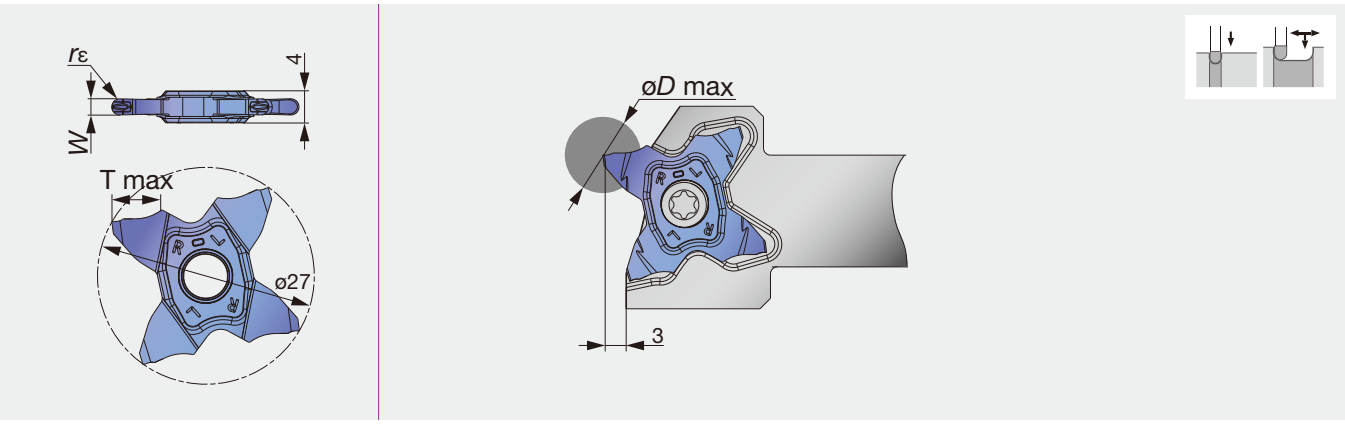

Designation	Grade AH725	W ± 0.02	rε	T max	Relation of groove depth (T) and Max. diameter (øD max)											
					T≤1.0	T≤2.0	T≤3.0	T≤3.5	T≤4.0	T≤4.5	T≤5.0	T≤5.5	T≤5.7	T≤6.0	T≤6.2	T≤6.4
TCM27-157-079	✓	1.57	0.79	3.0	∞	∞	∞	-	-	-	-	-	-	-	-	-
TCM27-200-100	✓	2.00	1.00	3.0	∞	∞	∞	-	-	-	-	-	-	-	-	-
TCM27-239-120	✓	2.39	1.20	5.7	∞	∞	∞	600	280	180	130	50	35	-	-	-
TCM27-300-150	✓	3.00	1.50	6.4	∞	∞	∞	600	280	180	135	105	95	85	78	55

Packing Quantity = 5 pcs.
✓ : Stocked items
Note: See page 9 for more information about grades.

Precision grooving tools with uniquely shaped insert with 4 cutting edges.

TOOLHOLDERS - FOR EXTERNAL GROOVING

TetraForce-Cut STCR/L

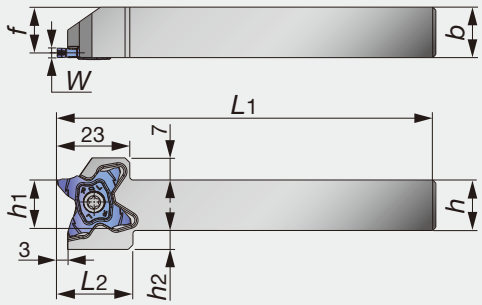

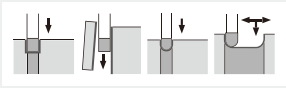

Inserts: TC*27...

W = 0.5 ~ 3.18 mm

Right hand (R) shown.

Designation	*W*	*h*1	*b*	*h*	*L*1	*f*	*h*2	*L*2
STCR/L1010-27	0.5 - 3.18	10	10	10	120	8.5	9.5	24
STCR/L1212-27	0.5 - 3.18	12	12	12	120	10.5	8	24
STCR/L1616-27	0.5 - 3.18	16	16	16	120	14.5	6	24
STCR/L2020-27	0.5 - 3.18	20	20	20	120	18.5	2	24
STCR/L2525-27	0.5 - 3.18	25	25	25	135	23.5	-	-

SPARE PARTS

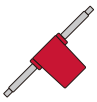

Designation	Screw	Wrench
STCR...-27	SR16-212-01397L	T-2010/5
STCL...-27	SR16-212-01397	T-2010/5

Precision grooving tools with uniquely shaped insert with 4 cutting edges with channel for high pressure coolant supply.

TOOLHOLDERS - FOR EXTERNAL GROOVING

TetraForce-Cut STCR/L-CHP

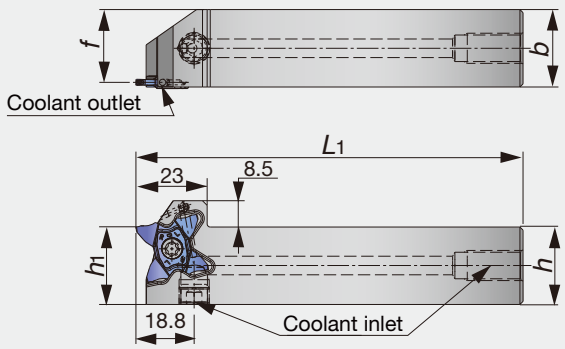

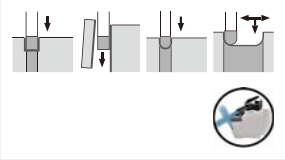

Inserts: TC*27...

W = 0.5 ~ 3.18 mm

Right hand (R) shown.

Designation	*W*	*h*1	*b*	*h*	*L*1	*f*	*h*2	*L*2
STCR/L2525-27-CHP	0.5 - 3.18	25	25	25	125	23.5	9.5	24

SPARE PARTS

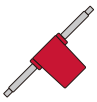

Designation	Screw	Wrench
STCR...-27-CHP	SR16-212-01397L	T-2010/5
STCL...-27-CHP	SR16-212-01397	T-2010/5

STANDARD CUTTING CONDITIONS

ISO	Workpiece materials	Grades	Cutting speed *Vc* (m/min)	Feed: *f* (mm/rev) Grooving, parting off TCS	Grooving, parting off TCM	Parting off (with hand) TCS	Profiling (with full radius insert) TCS	Profiling (with full radius insert) TCM	Depth of cut for profiling (with full radius insert)
P	Carbon steel (S45C / C45, etc.)	AH725	100 - 200	0.05 - 0.15	0.05 - 0.25	0.04 - 0.12	0.05 - 0.10	0.05 - 0.15	0.5
P	Alloy steel (SCM435 / 34CrMo4, etc.)	AH725	50 -180	0.05 - 0.15	0.05 - 0.25	0.04 - 0.12	0.05 - 0.10	0.05 - 0.15	0.5
M	Stainless steel (SUS304 / X5CrNi18-9, etc.)	AH725	100 - 150	0.05 - 0.15	0.05 - 0.20	0.04 - 0.12	0.05 - 0.10	0.05 - 0.15	0.5
K	Grey cast iron (FC250 / 250 / GG25, etc.)	AH725	50 - 180	0.05 - 0.15	0.05 - 0.25	0.04 - 0.12	0.05 - 0.10	0.05 - 0.15	0.5
K	Ductile cast iron (FCD400 / 400-15 / GGG400, etc.)	AH725	50 - 120	0.05 - 0.15	0.05 - 0.20	0.04 - 0.12	0.05 - 0.10	0.05 - 0.15	0.5
S	Titanium alloys (Ti-6Al-4V, etc.)	AH725	30 - 60	0.05 - 0.15	0.05 - 0.15	0.04 - 0.12	0.05 - 0.10	0.05 - 0.10	0.5

Note: See page 9 for more information about grades.

TETRAMINI-CUT
TUNGALOY

Accuracy and excellence in surface quality of small parts

Uniquely designed insert pocket of TetraMini-Cut provides highly stable machining and excellent insert durability.

- Ground insert with **4 cutting edges** for highly accurate grooving operations:

- Available for machining shallow groove on small parts

- **Sharp cutting edge** for high accuracy and surface quality

- Designed for machining next to shoulder with no interference

- **Uniquely designed insert pocket** protects unused corners from unexpected damages by chips:

- **Unique clamping system** provides high insert stability in cutting and assures accurate repeatability.

- Insert screw can be operated from both front and rear sides, which simplifies the insert indexing on small lathes.

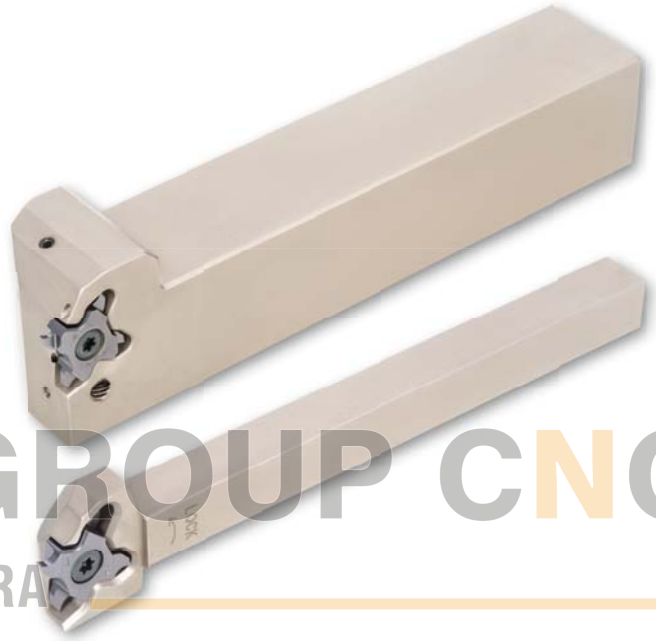

TUNGFORCE GROOVE
ACCELERATED MACHINING

Line up:

- A wide variety of inserts for machining small parts:
Covers the width from 0.33 to 3.0 mm (0.013” to 0.118”) for grooving and parting-off
Grooving depth: 0.8 to 2.5 mm (0.031” to 0.098”)

- Threading: Thread angle = 60º, pitch = 0.8 to 3.0 mm (0.031” to 0.118”), TPI = 32 to 8

- Suitable for external grooving on small parts:
Square shank toolholders: 10 to 25 mm (0.375” to 1.00”)
Round shank toolholders: 14 to 25.4 mm (0.551” to 1.00”)

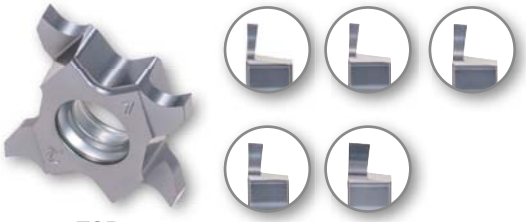

TCP

TCT

Precision grooving tools with uniquely shaped insert for swiss type machine, automatic and general lathes

TOOLHOLDER - FOR EXTERNAL GROOVING

TetraMini-Cut / TetraMini-Thread STCR/L-18

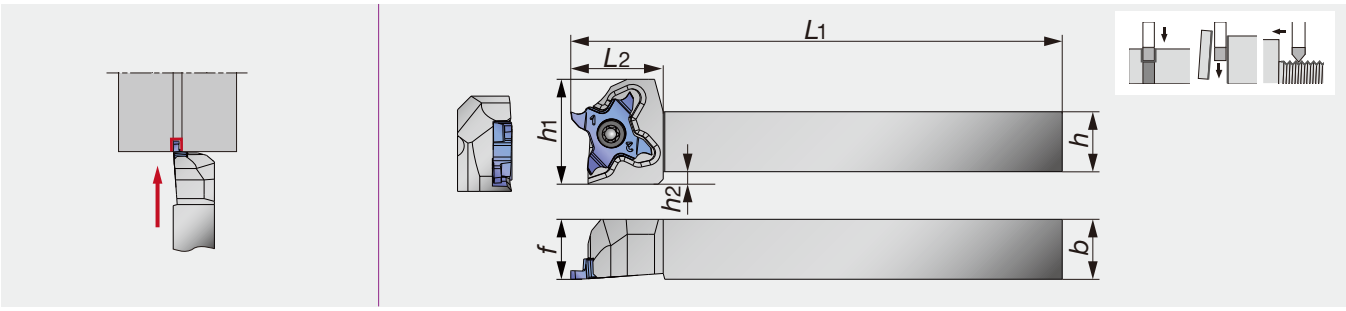

Right hand (R) shown.

Designation	*h*	*b*	*L*1	*L*2	*h*1	*f*	*h*2	Insert
STCR/L1010X18	10.0	10.0	120.0	18.5	10.0	10.0	4.5	TC*18*
STCR/L1212F18	12.0	12.0	85.0	18.5	12.0	12.0	2.5	TC*18*
STCR/L1212X18	12.0	12.0	120.0	18.5	12.0	12.0	2.5	TC*18*
STCR/L1616X18	16.0	16.0	120.0	18.5	16.0	16.0	0.0	TC*18*
STCR/L2020H18	20.0	20.0	100.0	18.5	20.0	20.0	0.0	TC*18*
STCR/L2020X18	20.0	20.0	120.0	23.0	20.0	25.0	0.0	TC*18*
STCR/L2525Z18	25.0	25.0	135.0	23.0	25.0	30.0	0.0	TC*18*

- The right hand insert (TC*18R***) is used for the right hand toolholders (STCR***), and the left hand insert (TC*18L***) is used for the left hand toolholders (STCL***).

SPARE PARTS


Designation	Clamping screw	Wrench
STCR***18	CSTC-4L100DL	T-1008/5
STCL***18	CSTC-4L100DR	T-1008/5

Precision grooving tools with uniquely shaped insert for swiss type machine, automatic and general lathes

TOOLHOLDER - ROUND SHANK

TetraMini-Cut / TetraMini-Thread JS-STCL18

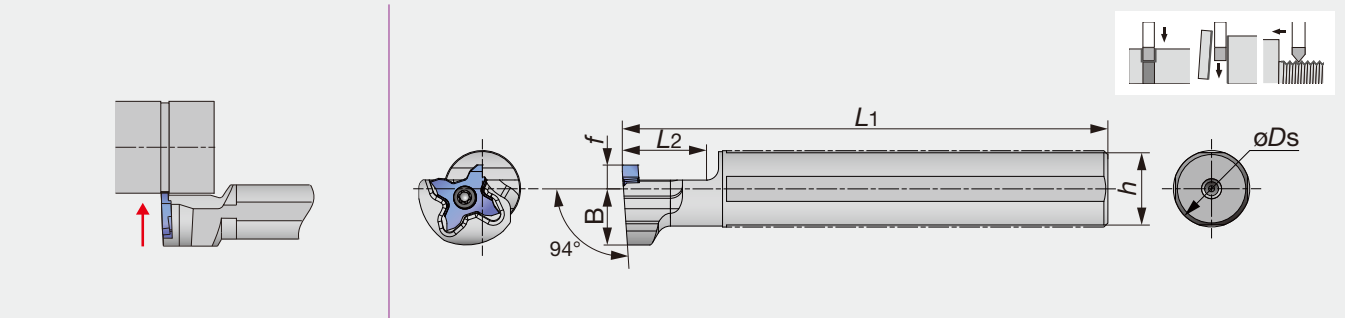

Left hand (L) shown.

Designation	øDs	L1	L2	H	B	f	Insert
JS14H-STCL18	14	100	20	13	14	6	TC*18*
JS159F-STCL18	15.875	85	20	15	14	6	TC*18*
JS16F-STCL18	16	85	20	15	14	6	TC*18*
JS19G-STCL18	19.05	90	20	18	14	6	TC*18*
JS19X-STCL18	19.05	120	20	18	14	6	TC*18*
JS20G-STCL18	20	90	20	19	14	6	TC*18*
JS20X-STCL18	20	120	20	19	14	6	TC*18*
JS22X-STCL18	22	120	20	21	12.25	10	TC*18*
JS25H-STCL18	25	100	20	24	12.25	10	TC*18*
JS254X-STCL18	25.4	120	20	24	12.25	10	TC*18*

SPARE PARTS


Designation	Clamping screw	Wrench
JS***STCL18	CSTC-4L100DR	T-1008/5

INSERTS

TCP18R/L-F (sharp edge)

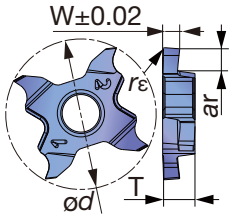

Designation	Grade SH725		Dimensions (mm)				
	R	L	*W*	*rε*	*ar*	T	*d*
TCP18R/L033F-005	✓	✓	0.33	0.05	0.8	4	18
TCP18R/L043F-005	✓	✓	0.43	0.05	1.2	4	18
TCP18R/L050F-005	✓	✓	0.5	0.05	1.2	4	18
TCP18R/L075F-005	✓	✓	0.75	0.05	2	4	18
TCP18R/L095F-005	✓	✓	0.95	0.05	2	4	18
TCP18R/L100F-010	✓	✓	1	0.1	2	4	18
TCP18R/L120F-010	✓	✓	1.2	0.1	2	4	18
TCP18R/L125F-010	✓	✓	1.25	0.1	2	4	18
TCP18R/L145F-010	✓	✓	1.45	0.1	2	4	18
TCP18R/L150F-010	✓	✓	1.5	0.1	2	4	18
TCP18R/L175F-010	✓	✓	1.75	0.1	2	4	18
TCP18R/L200F-010	✓	✓	2	0.1	2.5	4	18
TCP18R/L250F-010	✓	✓	2.5	0.1	2.5	4	18
TCP18R/L300F-010	✓	✓	3	0.1	2.5	4	18

✓ : Stocked items

Note: See page 9 for more information about grades.

TCP18R/L

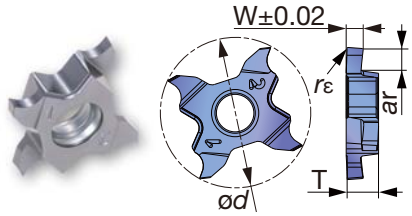

Designation	Grade AH725 R	Grade AH725 L	Dimensions (mm) W	rε	ar	T	d
TCP18R/L033-005	✓	✓	0.33	0.05	0.8	4	18
TCP18R/L043-005	✓	✓	0.43	0.05	1.2	4	18
TCP18R/L050-005	✓	✓	0.5	0.05	1.2	4	18
TCP18R/L075-005	✓	✓	0.75	0.05	2	4	18
TCP18R/L095-005	✓	✓	0.95	0.05	2	4	18
TCP18R/L100-010	✓	✓	1	0.1	2	4	18
TCP18R/L120-010	✓	✓	1.2	0.1	2	4	18
TCP18R/L125-010	✓	✓	1.25	0.1	2	4	18
TCP18R/L145-010	✓	✓	1.45	0.1	2	4	18
TCP18R/L150-010	✓	✓	1.5	0.1	2	4	18
TCP18R/L175-010	✓	✓	1.75	0.1	2	4	18
TCP18R/L200-010	✓	✓	2	0.1	2.5	4	18
TCP18R/L250-010	✓	✓	2.5	0.1	2.5	4	18
TCP18R/L300-010	✓	✓	3	0.1	2.5	4	18

✓ : Stocked items

Note: See page 9 for more information about grades.

STANDARD CUTTING CONDITIONS

ISO	Workpiece materials	Priority	Grades	Cutting speed Vc (m/min)	Feed f (mm/rev)
P	Low carbon steels (C15, C20 etc.)	First choice	SH725	80 - 180	0.03 - 0.1
		Toughness	AH725	80 - 180	0.03 - 0.1
	Carbon steels, Alloy steels (C55, 42CrMoS4 etc.)	First choice	SH725	80 - 180	0.03 - 0.1
		Toughness	AH725	80 - 180	0.03 - 0.1
	Prehardened steels (NAK80, PX5 etc.)	First choice	SH725	80 - 180	0.03 - 0.1
		Toughness	AH725	80 - 180	0.03 - 0.1
M	Stainless steels (X5CrNi18-9, X5CrNiMo17-12-2 etc)	First choice	SH725	50 - 120	0.03 - 0.1
		Toughness	AH725	50 - 120	0.03 - 0.1
K	Grey cast irons (250, 300 etc.)	First choice	AH725	50 - 180	0.03 - 0.1
		Sharpness	SH725	50 - 180	0.03 - 0.1
	Ductile cast irons (400-15, 600-3 etc.)	First choice	AH725	50 - 180	0.03 - 0.1
		Sharpness	SH725	50 - 180	0.03 - 0.1
S	Titanium alloys (Ti-6Al-4V, etc.)	First choice	SH725	20 - 80	0.03 - 0.1
		Toughness	AH725	20 - 80	0.03 - 0.1
	Superalloys (Inconel718, etc.)	First choice	SH725	20 - 80	0.03 - 0.1
		Toughness	AH725	20 - 80	0.03 - 0.1

INSERTS

TCT18R/L (For Threading)

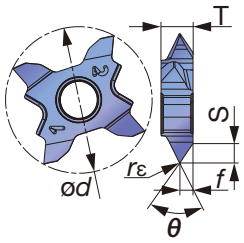

Designation	Grade AH725 R	Grade AH725 L	pitch min	pitch max	Dimensions (mm) f	S	rε	θ(°)	T	d
TCT18R/L-60N-010	✓	✓	0.8	3	1.6	2.67	0.1	60	4	18
TCT18R/L-60N-020	✓	✓	1.5	3	1.6	2.57	0.2	60	4	18

✓ : Stocked items

Note: See page 9 for more information about grades.

STANDARD CUTTING CONDITIONS

ISO	Workpiece materials	Grades	Cutting speed Vc (m/min)	Pitch (mm)	TPI
P	Low carbon steels (C15, C20 etc.)	AH725	60 - 150	0.8 - 3.0	32 -8
	Carbon steels, Alloy steels (C55, 42CrMoS4 etc.)	AH725	60 - 150	0.8 - 3.0	32 -8
	Prehardened steels (NAK80, PX5 etc.)	AH725	60 - 150	0.8 - 3.0	32 -8
M	Stainless steels (X5CrNi18-9, X5CrNiMo17-12-2 etc)	AH725	50 - 80	0.8 - 3.0	32 -8
K	Grey cast irons (250, 300 etc.)	AH725	50 - 100	0.8 - 3.0	32 -8
	Ductile cast irons (400-15, 600-3 etc.)	AH725	50 - 100	0.8 - 3.0	32 -8
S	Titanium alloys (Ti-6Al-4V, etc.)	AH725	30 - 100	0.8 - 3.0	32 -8
	Superalloys (Inconel718, etc.)	AH725	30 - 100	0.8 - 3.0	32 -8

MEMO

DUOJUST CUT
TUNGALOY

Stable parting-off operations due to unique clamping system

DuoJust-Cut , a new line of small tools with durable insert containing 2 cutting edges, is excellent for parting miniature parts up to 16-mm diameter.

- **Great cutting performance** in various parting-off operations:

- **Stable machining** by choosing the length of inserts according to the necessary parting-off diameter

- **Unique clamping system** holds the insert at three points around the insert hole, delivering high rigidity as well as stability in machining.

- **Unique insert geometry**:

- The pocket design allows each cutting edge to clamp separately without dependence on the other.

- **3 different lengths of inserts** can be used on one toolholder.

- The insert's sharp cutting edge reduces cutting force and provides **high-quality machined surface**.

TUNGROOVE FORCE
ACCELERATED MACHINING

Line up:

Available in 2 types of toolholders:
Sub-spindle type: Square shanks in 10 and 12 mm (0.375” and 0.50”)
Regular type: Square shanks in 10, 12, 16, and 20 mm (0.375”, 0.50”, 0.625”, and 0.778”)

JXPG06

JXPG12

JXPG16

TOOL HOLDERS - FOR PARTING OFF

DuoJust-Cut JSXXR/L

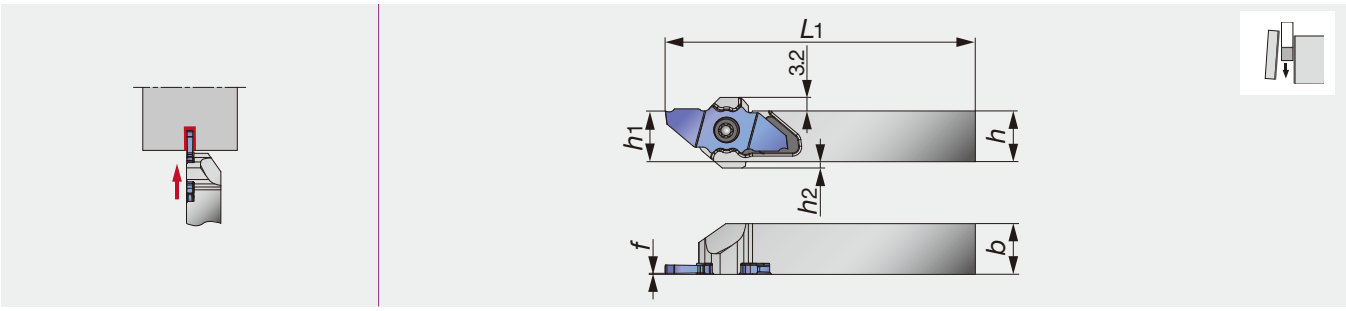

Right hand (R) shown.

Designation	*h*	*b*	*f*	*L*1*	*h*1	*h*2	Insert
JSXXR/L1010X09	10.0	10.0	0.2	≤ 120.0	10.0	3.0	JXPG06,12,16
JSXXR/L1212F09	12.0	12.0	0.2	≤ 85.0	12.0	1.5	JXPG06,12,16
JSXXR/L1212X09	12.0	12.0	0.2	≤ 120.0	12.0	1.5	JXPG06,12,16
JSXXR/L1616X09	16.0	16.0	0.2	≤ 120.0	16.0	0.0	JXPG06,12,16
JSXXR/L2020H09	20.0	20.0	0.2	≤ 100.0	20.0	0.0	JXPG06,12,16

* "*L*1" is calculated with JXPG16*** insert. When JXPG12*** insert is used, "*L*1" is shorter 2 mm.
When JXPG06*** insert is used, "*L*1" is shorter 4 mm.

Note: The right hand insert (JXPG**R***) is used for the right hand toolholders (JSXXR***), and the left hand insert (JXPG**L***) is used for the left hand toolholders (JSXXL***).

SPARE PARTS

Designation	Clamping screw	Wrench
JSXXR*****	CSTC-4L100DL	T-1008/5
JSXXL*****	CSTC-4L100DR	T-1008/5

"J-series" Parting off tool for sub spindle in automatic lathes

TOOL HOLDERS - FOR PARTING OFF IN SUB-SPINDLE

DuoJust-Cut JSXXR/L-S

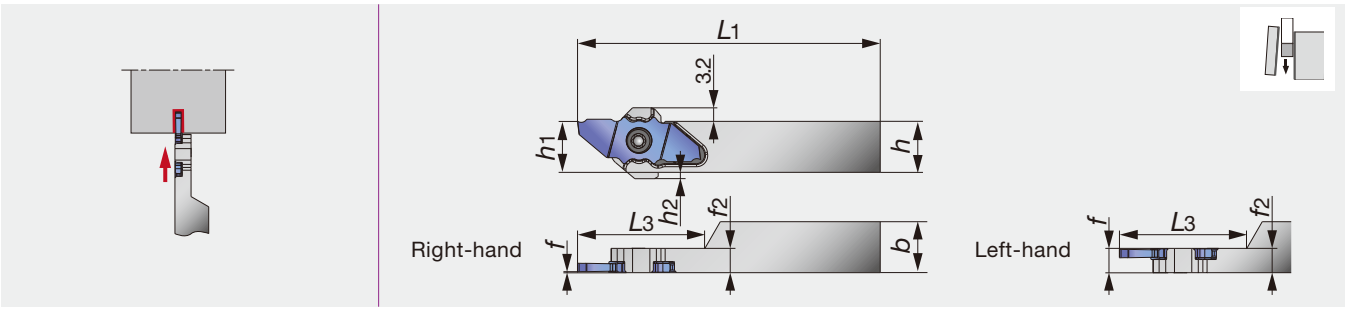

Designation	h	b	f	L1	* L3	*h1	h2	f2	Insert
JSXXR/L1010X09-S	10.0	10.0	0.2/5.5	≤ 120.0	≤ 26.0	10.0	3.0	5.7	JXPG06,12,16
JSXXR/L1212F09-S	12.0	12.0	0.2/5.5	≤ 85.0	≤ 26.0	12.0	1.5	5.7	JXPG06,12,16
JSXXR/L1212X09-S	12.0	12.0	0.2/5.5	≤ 120.0	≤ 30.0	12.0	1.5	5.7	JXPG06,12,16

* "*L*1" and "*L*3" are calculated with JXPG16*** insert. When JXPG12*** insert is used, "*L*1" and "*L*3" are shorter 2 mm. When JXPG06*** insert is used, "*L*1" and "*L*3" are shorter 4 mm.

Note: The right hand insert (JXPG**R***) is used for the right hand toolholders (JSXXR***), and the left hand insert (JXPG**L***) is used for the left hand toolholders (JSXXL***).

SPARE PARTS

Designation	Clamping screw	Wrench
JSXXR*****-S	CSTC-4L055DL	T-1008/5
JSXXL*****-S	CSTC-4L055DR	T-1008/5

SELECTING SYSTEMS FOR SUB SPINDLE

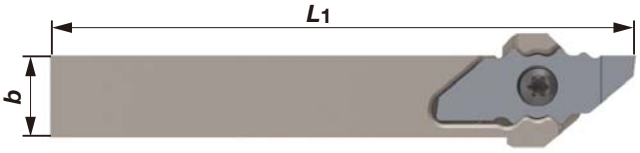

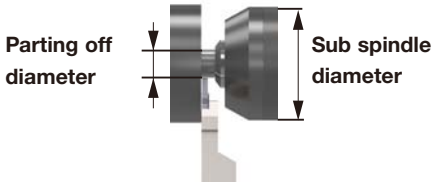

Sub spindle dia.	Max parting off dia.	Shank size b	Tool length L1	Insert	Toolholder
ø40	~ ø6	10	116	JXPG06*	JSXXR/L1010X09-S
ø40	~ ø6	12	81	JXPG06*	JSXXR/L1212F09-S
ø40	~ ø12	10	118	JXPG12*	JSXXR/L1010X09-S
ø40	~ ø12	12	83	JXPG12*	JSXXR/L1212F09-S
ø40	~ ø16	10	120	JXPG16*	JSXXR/L1010X09-S
ø40	~ ø16	12	85	JXPG16*	JSXXR/L1212F09-S
ø50	~ ø6	12	116	JXPG06*	JSXXR/L1212X09-S
ø50	~ ø12	12	118	JXPG12*	JSXXR/L1212X09-S
ø50	~ ø16	12	85	JXPG16*	JSXXR/L1212F09-S
ø50	~ ø16	12	120	JXPG16*	JSXXR/L1212X09-S

INSERTS

JXPG06R/L-F (Sharp edge)

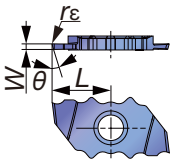

Right hand (R) shown.

Designation	Grade SH725 R	Grade SH725 L	Dmax	Dimensions (mm) W	Dimensions (mm) rε	Dimensions (mm) L	θ (deg)
JXPG06R/L10F	✓	✓	6	1	0.05	10.5	-
JXPG06R/L15F	✓	✓	6	1.5	0.05	10.5	-
JXPG06R/L10F-15	✓	✓	6	1	0.05	10.5	15
JXPG06R/L15F-15	✓	✓	6	1.5	0.05	10.5	15

✓ : Stocked items

Note: See page 9 for more information about grades.

*D*max: Max. parting off dia

JXPG12R/L-F (Sharp edge)

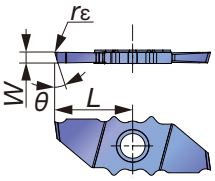

Right hand (R) shown.

Designation	Grade SH725 R	Grade SH725 L	Dmax	Dimensions (mm) W	Dimensions (mm) rε	Dimensions (mm) L	θ (deg)
JXPG12R/L15F	✓	✓	12	1.5	0.05	12.5	-
JXPG12R/L20F	✓	✓	12	2	0.05	12.5	-
JXPG12R/L15F-15	✓	✓	12	1.5	0.05	12.5	15
JXPG12R/L20F-15	✓	✓	12	2	0.05	12.5	15

✓ : Stocked items

Note: See page 9 for more information about grades.

*D*max: Max. parting off dia

JXPG16R/L-F(Sharp edge)

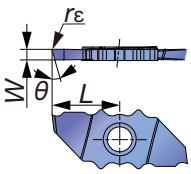

Right hand (R) shown.

Designation	Grade SH725 R	Grade SH725 L	Dmax	W	rε	L	θ (deg)
			Dimensions (mm)				
JXPG16R/L15F	✓	✓	16	1.5	0.05	14.5	-
JXPG16R/L20F	✓	✓	16	2	0.05	14.5	-
JXPG16R/L15F-15	✓	✓	16	1.5	0.05	14.5	15
JXPG16R/L20F-15	✓	✓	16	2	0.05	14.5	15

✓ : Stocked items

Note: See page 9 for more information about grades.

D_{max}: Max. parting off dia

STANDARD CUTTING CONDITIONS

ISO	Workpiece materials	Grades	Cutting speed Vc (m/min)	Feed f (mm/rev)
P	Low carbon steels (C15, C20, etc.)	SH725	50 - 200	0.01 - 0.05
	Carbon steels, Alloy steels (C55, 42CrMoS4, etc.)	SH725	50 - 200	0.01 - 0.05
	快削鋼 (SUH22, SUH23 など)	SH725	50 - 200	0.01 - 0.05
M	Stainless steels (X5CrNi18-9, X5CrNiMo17-12-2, etc)	SH725	50 - 200	0.01 - 0.05
N	アルミ合金 (A5056, A6061 など)	SH725	150 - 200	0.01 - 0.05
	銅合金 (C2600, C280C など)	SH725	100 - 200	0.01 - 0.05
S	Titanium alloys (Ti-6Al-4V, etc.)	SH725	30 - 80	0.01 - 0.05
	Superalloys (Inconel718, etc.)	SH725	30 - 80	0.01 - 0.05

EASYMULTICUT TUNGALOY

The most efficient multi-functional tool for parting, grooving, and turning operations

Unique self-clamping system increases tool rigidity, resulting in excellent performance with high machining conditions.

- **Unique self-clamping system:**

- The tool's top shape does not block the chip evacuation out from the groove.

- The insert's secure clamping guarantees reliable machining in grooving and side turning.

- One type of the insert can be used for parting-off, external, internal and face, grooving and side turning.

- **The most efficient tool for deep face grooving.**

- **CHP type tools with internal coolant supply:**

- Provides **high wear resistance**, **excellent surface finish**, and smooth chip evacuation

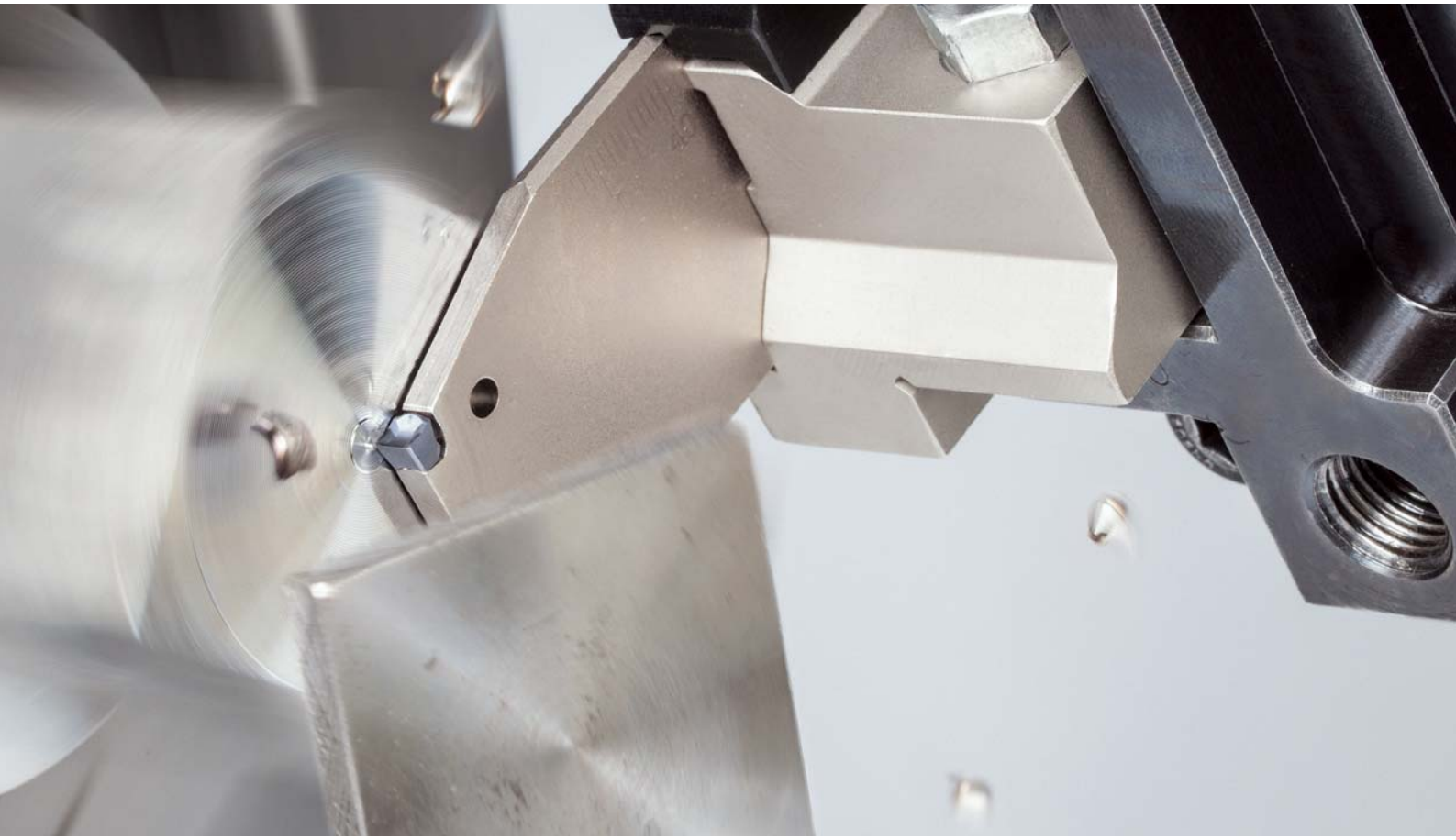

TUNGFORCE GROOVE
ACCELERATED MACHINING

Line up:

Inserts:
ETX chipbreaker is designed for multi-directional cutting with optimum performance in parting, grooving, and turning applications.
EGM chipbreaker is designed for parting and grooving under tough conditions for various materials.
Inserts width: 4, 5, and 6 mm (0.157”, 0.197”, and 0.236”)
(page 204)

Tools:
Available for all types of applications in a wide range:
Monoblock type, square shank for external operation
Boring bar with internal coolant supply
Adjustable blades for parting-off

- Tungaloy’s new concept for grooving:
Adjustable face blades: Developed for face grooving, ranging from øD 30 to 500 mm (1.378” to 19.685”) for the inserts with the grooving widths in 4, 5, and 6 mm (0.157”, 0.197”, and 0.1969”)

Applicable overhang length: 18 to 65 mm (0.709” to 2.559”) set by only changing the blade positions

An internal coolant channel supplies coolant to the groove while machining, which results in excellent chip evacuation and surface finish

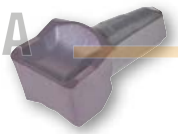
EGM


ETX

TOOLHOLDERS - FOR FACE GROOVING

EasyMulti-Cut ETFR/L

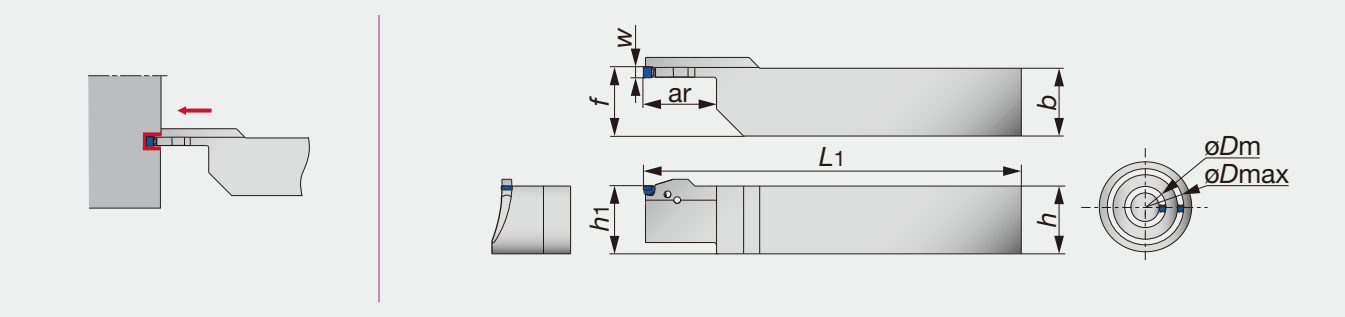

Right hand (R) shown.

Designation	W	øDm	øDmax	ar	h1	b	h	L1	f	Insert
ETFR/L2020-4T15-030035	4	30	35	15	20	20	20	125	20.5	E**4...
ETFR/L2525-4T15-030035	4	30	35	15	25	25	25	150	25.5	E**4...
ETFR/L2020-4T22-035045	4	35	45	22	20	20	20	125	20.5	E**4...
ETFR/L2525-4T22-035045	4	35	45	22	25	25	25	150	25.5	E**4...
ETFR/L2020-4T25-045055	4	45	55	25	20	20	20	125	20.5	E**4...
ETFR/L2525-4T25-045055	4	45	55	25	25	25	25	150	25.5	E**4...
ETFR/L2020-4T25-055075	4	55	75	25	20	20	20	125	20.5	E**4...
ETFR/L2525-4T25-055075	4	55	75	25	25	25	25	150	25.5	E**4...
ETFR/L2020-4T25-075120	4	75	120	25	20	20	20	125	20.5	E**4...
ETFR/L2525-4T25-075120	4	75	120	25	25	25	25	150	25.5	E**4...
ETFR/L2525-4T25-120200	4	120	200	25	25	25	25	150	25.5	E**4...
ETFR/L2525-4T25-200500	4	200	500	25	25	25	25	150	25.5	E**4...
ETFR/L2525-5T25-035045	5	35	45	25	25	25	25	150	25.5	ETX5...
ETFR/L2525-5T25-045055	5	45	55	25	25	25	25	150	25.5	ETX5...
ETFR/L2525-5T25-055075	5	55	75	25	25	25	25	150	25.5	ETX5...
ETFR/L2525-5T32-075120	5	75	120	32	25	25	25	150	25.5	ETX5...
ETFR/L2525-5T32-120200	5	120	200	32	25	25	25	150	25.5	ETX5...
ETFR/L2525-5T32-200500	5	200	500	32	25	25	25	150	25.5	ETX5...
ETFR/L2525-6T25-040055	6	40	55	25	25	25	25	150	25.5	ETX6...
ETFR/L2525-6T25-055075	6	55	75	25	25	25	25	150	25.5	ETX6...
ETFR/L2525-6T32-075120	6	75	120	32	25	25	25	150	25.5	ETX6...
ETFR/L2525-6T32-120200	6	120	200	32	25	25	25	150	25.5	ETX6...
ETFR/L2525-6T32-200500	6	200	500	32	25	25	25	150	25.5	ETX6...

SPARE PARTS

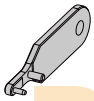

Designation	Wrench*
ETFR/L20...	ECW-456EF
ETFR/L25...	ECW-456EF

*Optional parts

Toolholders for face grooving & turning, with channels for high pressure coolant.

TOOLHOLDERS - FOR FACE GROOVING

EasyMulti-Cut ETFR-CHP

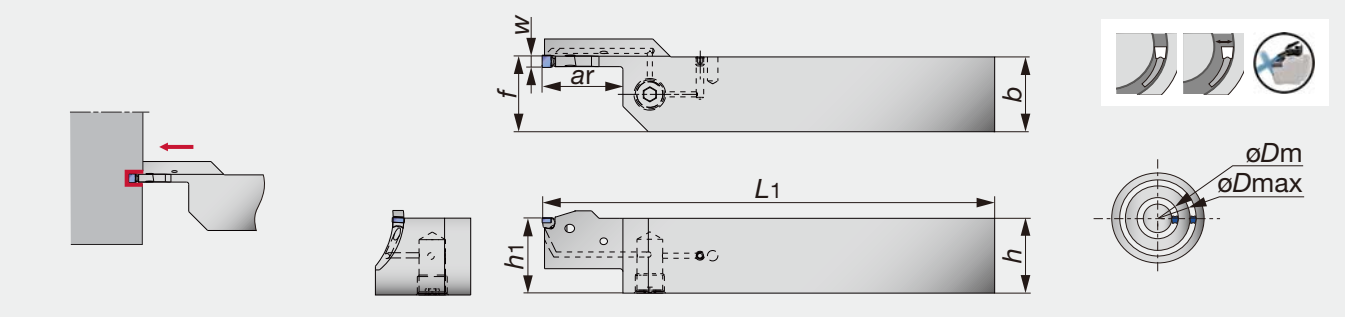

Right hand (R) shown.

Designation	W	øDm	øDmax	ar	h	b	L1	h1	f	Insert
ETFR2525-4T15-030035-CHP	4	30	35	15	25	25	150	25	25.5	E**4
ETFR2525-4T22-035045-CHP	4	35	45	22	25	25	150	25	25.5	E**4
ETFR2525-4T25-045055-CHP	4	45	55	25	25	25	150	25	25.5	E**4
ETFR2525-4T25-055075-CHP	4	55	75	25	25	25	150	25	25.5	E**4
ETFR2525-4T25-075120-CHP	4	75	120	25	25	25	150	25	25.5	E**4
ETFR2525-4T25-120200-CHP	4	120	200	25	25	25	150	25	25.5	E**4
ETFR2525-4T25-200500-CHP	4	200	500	25	25	25	150	25	25.5	E**4

SPARE PARTS

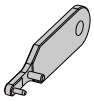

Designation	Wrench*
ETFR...-CHP	ECW-456EF

*Optional parts

BLADES - FOR PARTING OFF

EasyMulti-Cut EGP

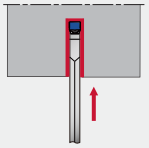

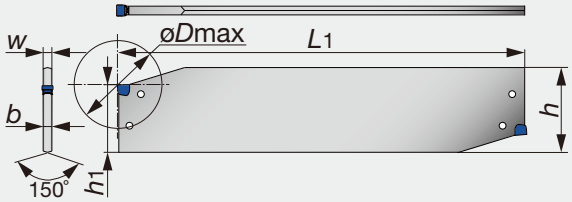

Designation	W	øDmax	h1	b	h	L1	Insert	Tool block
EGP26-4D	4	80	21.4	3.2	26	150	E**4...	CTBU**-26
EGP32-4D	4	100	24.9	3.2	32	150	E**4...	CTBU**-32
EGP32-5D	5	120	24.9	4	32	150	ETX5...	CTBU**-32
EGP32-6D	6	120	24.9	5.2	32	150	ETX6...	CTBU**-32

SPARE PARTS

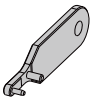

Designation	Wrench*
EGP26-4D	ECW-456EF
EGP32 ...	ECW-456EF

*Optional parts

TOOL BLOCK - FOR EGP TYPE

EasyMulti-Cut CTBU

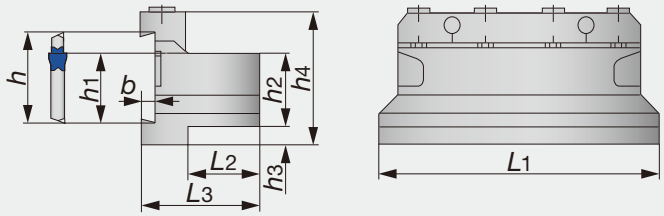

Designation	h_1	b	h	L_1	h_2	h_3	h_4	L_2	L_3	Blade
CTBU20-26	21.4	4	26	86	20	9	43	21	38	EGP26
CTBU25-26	21.4	4	26	110	25	5	45	23	42	EGP26
CTBU20-32	24.8	5.3	32	100	20	13	50	19	38	EGP32
CTBU25-32	24.8	5.3	32	110	25	8	50	23	42	EGP32
CTBU32-32	24.8	5.3	32	110	32	5	54	29	48	EGP32

SPARE PARTS



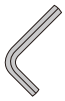

Designation	Clamping screw	Clamp	Wrench
CTBU20-26	CM6x30-S	CT-86	P-5
CTBU25-26	CM6x30-S	CT-100	P-5
CTBU20-32	CM6x30-S	CT-105	P-5
CTBU25-32	CM6x30-S	CT-110	P-5
CTBU32-32	CM6x30-S	CT-110	P-5

TOOLHOLDERS - FOR EXTERNAL GROOVING

EasyMulti-Cut ETER/L

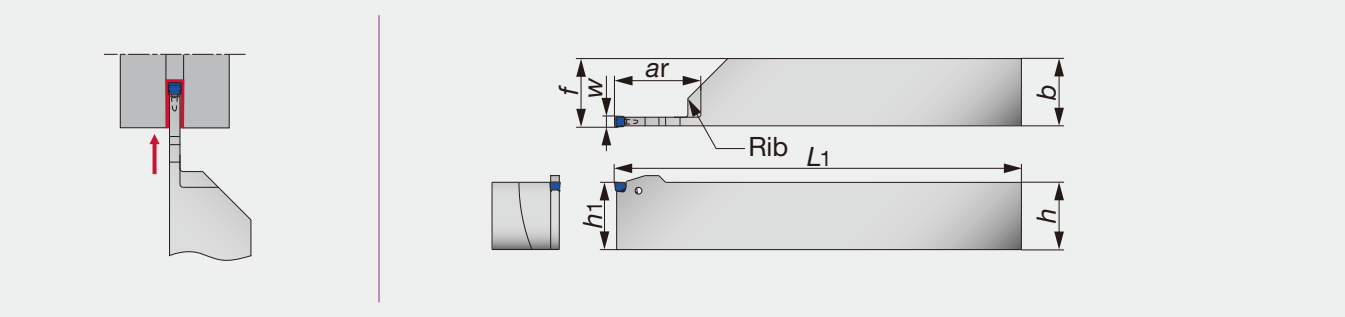

Right hand (R) shown.

Designation	W	ar	h1	b	h	L1	f	Insert	Rib
ETER/L2020-4T25	4	25	20	20	20	125	20.4	E**4...	Without
ETER/L2525-4T25	4	25	25	25	25	150	25.4	E**4...	Without
ETER/L3232-4T30	4	30	32	32	32	170	32.4	E**4...	Without
ETER/L2020-5T25	5	25	20	20	20	125	20.4	ETX5...	Without
ETER/L2525-5T32	5	32	25	25	25	150	25.4	ETX5...	Without
ETER/L3232-5T32	5	32	32	32	32	170	32.4	ETX5...	Without
ETER/L2525-6T35	6	35*	32	32	32	150	25.4	ETX6...	With
ETER/L3232-6T35	6	35**	32	32	32	170	32.4	ETX6...	With

* Max. ø170
**Max. ø340

SPARE PARTS

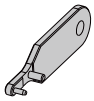

Designation	Wrench*
ETER/L2020-4T25	ECW-456EF
ETER/L2525-4T25	ECW-456EF
ETER/L3232-4T30	ECW-456EF
ETER/L2020-5T25	ECW-456EF
ETER/L2525-5T32	ECW-456EF
ETER/L3232-5T32	ECW-456EF
ETER/L2525-6T35	ECW-456EF
ETER/L3232-6T35	ECW-456EF

*Optional parts

TOOLHOLDERS - FOR INTERNAL GROOVING

EasyMulti-Cut ETIR/L

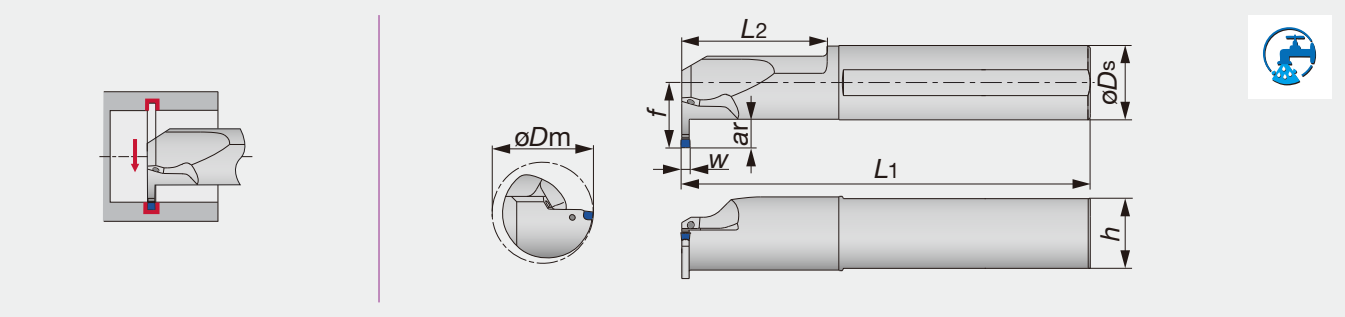

Right hand (R) shown.

Designation	W	øDm	ar	øDs	h	L1	f	L2	Insert
ETIR/L16-4T06-D200	4	20	6	16	15	160	15	40	E**4...
ETIR/L20-4T06-D250	4	25	6	20	18	160	17	40	E**4...
ETIR/L25-4T09-D320	4	32	9	25	23	200	22.5	40	E**4...
ETIR/L32-4T11-D400	4	40	11	32	30	250	28	60	E**4...
ETIR/L32-5T11-D400	5	40	11	32	30	250	28	60	ETX5...
ETIR/L32-6T11-D400	6	40	11	32	30	250	28	60	ETX6...

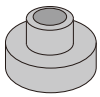

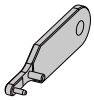

SPARE PARTS

Designation	Seal cap (internal screw)	Wrench*
ETIR/L16-4T06-D200	CA-16(M6)	ECW-456I
ETIR/L20-4T06-D250	CA-20(M6)	ECW-456I
ETIR/L25-4T09-D320	CA-25(R1/8")	ECW-456EF
ETIR/L32...	CA-32(R1/8")	ECW-456EF

*Optional parts

BLADES - FOR FACE GROOVING

Face Blade EFPR/L

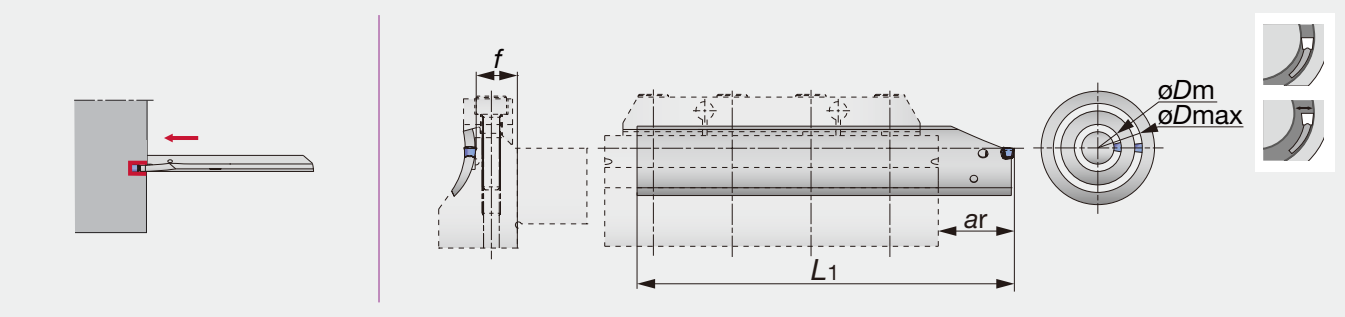

Right hand (R) shown.

Designation	W	øDm	øDmax	f	L1	min ar	max ar	Insert
EFPR/L-4-030035	4	30.0	35.0	13.6	125.0	18	50	E**4
EFPR-4-035045	4	35.0	45.0	13.6	125.0	18	50	E**4
EFPR-4-045055	4	45.0	55.0	13.6	125.0	18	50	E**4
EFPR-4-055075	4	55.0	75.0	13.6	125.0	18	50	E**4
EFPR-4-075120	4	75.0	120.0	13.6	140.0	18	65	E**4
EFPR-4-120200	4	120.0	200.0	13.6	140.0	18	65	E**4
EFPR-4-200500	4	200.0	500.0	13.6	140.0	18	65	E**4
EFPR-5-035045	5	35.0	45.0	13.6	125.0	19	50	ETX5
EFPR-5-045055	5	45.0	55.0	13.6	125.0	19	50	ETX5
EFPR-5-055075	5	55.0	75.0	13.6	125.0	19	50	ETX5
EFPR-5-075120	5	75.0	120.0	13.6	140.0	19	65	ETX5
EFPR-5-120200	5	120.0	200.0	13.6	140.0	19	65	ETX5
EFPR-5-200500	5	200.0	500.0	13.6	140.0	19	65	ETX5
EFPR-6-045055	6	45.0	55.0	13.6	125.0	20	50	ETX6
EFPR-6-055075	6	55.0	75.0	13.6	125.0	20	50	ETX6
EFPR-6-075120	6	75.0	120.0	13.6	140.0	20	65	ETX6
EFPR-6-120200	6	120.0	200.0	13.6	140.0	20	65	ETX6
EFPR/L-6-200500	6	200.0	500.0	13.6	140.0	20	65	ETX6

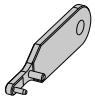

SPARE PARTS

Designation	Wrench*
EFPR/L...	ECW-456I

*Optional parts

Tool block for EasyMultI-Cut face blade series, with channels for high pressure coolant

TOOL BLOCK - FOR EFP BLADES

CTBU-CHP for EFPR/L

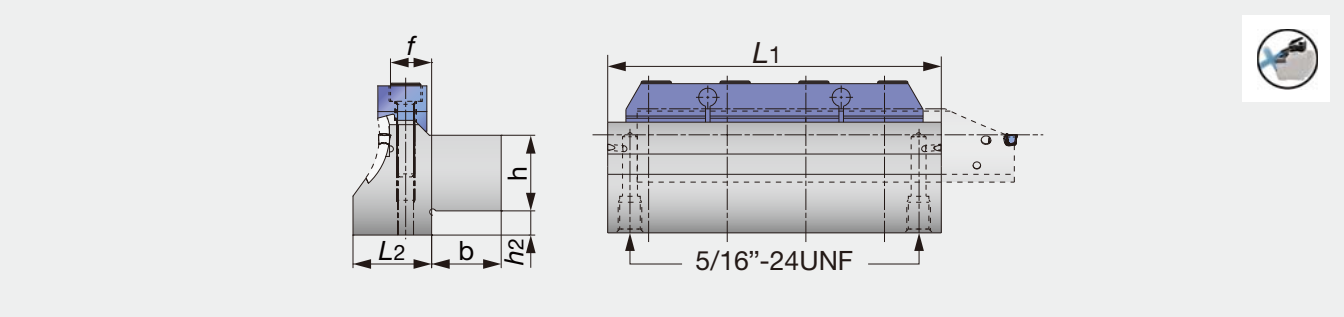

Designation	W	øDm	h	b	h2	L2	L1	Blade
CTBU25-030-4-CHP	4	30.0	25.0	23.0	7.6	26.0	110.0	EFPR/L-4-030035
CTBU25-035-4/5-CHP	4, 5	35.0	25.0	23.0	7.6	26.0	110.0	EFPR/L-4/5-035045
CTBU25-045-4/5-CHP	4, 5	45.0	25.0	23.0	7.6	26.0	110.0	EFPR/L-4/5-045055
CTBU25-055-4/5-CHP	4, 5	55.0	25.0	23.0	7.6	24.0	110.0	EFPR/L-4/5-055075
CTBU25-075-4/5-CHP	4, 5	75.0	25.0	23.0	7.6	22.0	110.0	EFPR/L-4/5-075120
CTBU25-120-4/5-CHP	4, 5	120.0	25.0	23.0	7.6	21.0	110.0	EFPR/L-4/5-120200
CTBU25-200-4/5-CHP	4, 5	200.0	25.0	23.0	7.6	18.5	110.0	EFPR/L-4/5-200500
CTBU25-045-6-CHP	6	45.0	25.0	23.0	7.6	28.0	110.0	EFPR/L-6-045055
CTBU25-055-6-CHP	6	55.0	25.0	23.0	7.6	26.0	110.0	EFPR/L-6-055075
CTBU25-075-6-CHP	6	75.0	25.0	23.0	7.6	24.0	110.0	EFPR/L-6-075120
CTBU25-120-6-CHP	6	120.0	25.0	23.0	7.6	23.0	110.0	EFPR/L-6-120200
CTBU25-200-6-CHP	6	200.0	25.0	23.0	7.6	20.5	110.0	EFPR/L-6-200500

SPARE PARTS

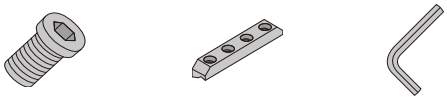

Designation	Clamping screw	Clamp	Wrench
CTBU...-CHP	CM6X30-S	CT-110	P-5

Adjustable blade for deep grooving and parting with coolant channel

BLADES- FOR PARTING OFF

Face Blade EGP-CHP

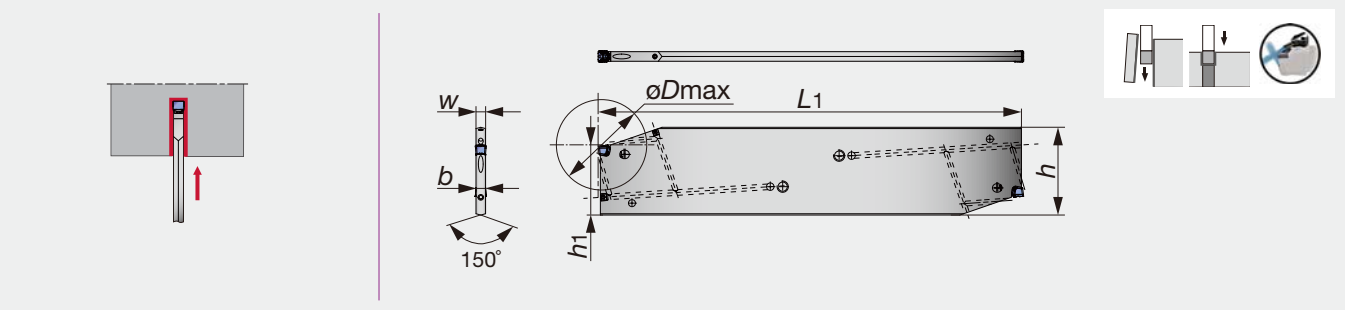

Designation	W	øDmax	ar	h	b	L1	h1	Insert
EGP32-4D-CHP	4	100	50	32	3.2	150	24.9	E**4
EGP32-5D-CHP	5	120	60	32	4	150	24.9	ETX5
EGP32-6D-CHP	6	120	60	32	5.2	150	24.9	ETX6

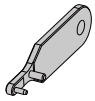

SPARE PARTS

Designation	Sealing screw	Wrench*
EGP...-CHP	SGC340	ECW-456EF

*Optional parts

TOOL BLOCK - FOR EGP-CHP BLADES

EasyMulti-Cut CTBU-CHP

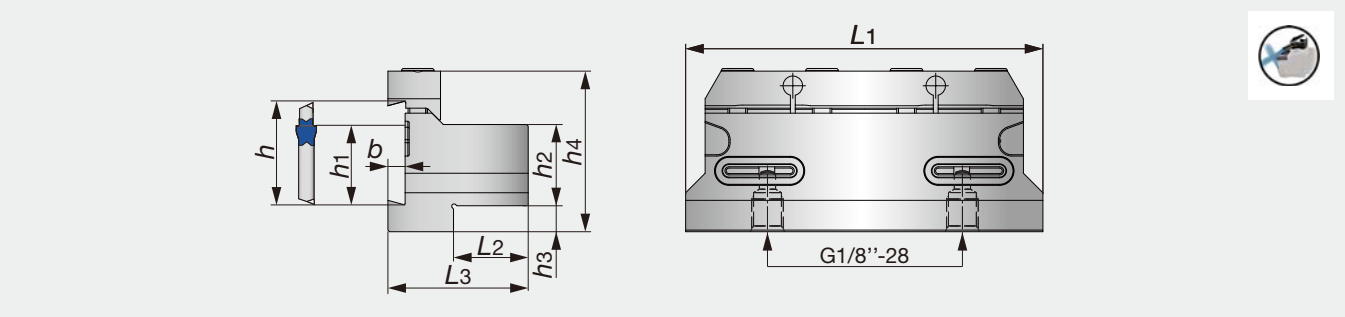

Designation	*h*	*h*1	*L*2	*L*1	*b*	*h*2	*h*3	*h*4	*L*3	Blade
CTBU25-32-CHP	24.8	32	23	110	5.3	25	8	50	42	EGP32-*D-CHP

SPARE PARTS

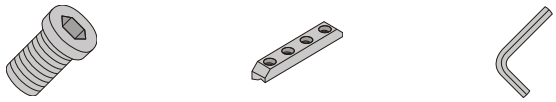

Designation	Clamping screw	Clamp	Wrench
CTBU...-CHP	SRM6X16DIN912-12.9	CT-110	P-5

STANDARD CUTTING CONDITIONS

ISO	Workpiece materials	Hardness	Grades	Chip-breaker	Cutting speed *Vc* (m/min)
P	Low carbon steels (C15, C20 etc.)	- 300 HB	AH725	ETX	80 - 180
		- 300 HB	AH725	EGM	80 - 180
	Carbon steels, Alloy steels (C55, 42CrMoS4 etc.)	- 300 HB	AH725	ETX	80 - 180
		- 300 HB	AH725	EGM	80 - 180
	Prehardened steels (NAK80, PX5 etc.)	- 300 HB	AH725	ETX	80 - 180
		- 300 HB	AH725	EGM	80 - 180
M	Stainless steels (X5CrNi18-9, X5CrNiMo17-12-2 etc)	-	AH725	ETX	50 - 120
		-	AH725	ETX	50 - 120

Note: See page 9 for more information about grades.

INSERTS

ETX

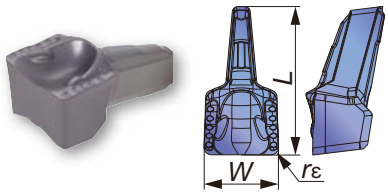

■Standard feed for grooving

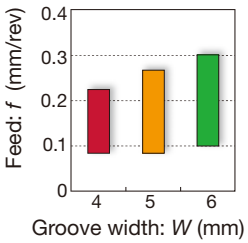

■Standard feed and DoC for turning

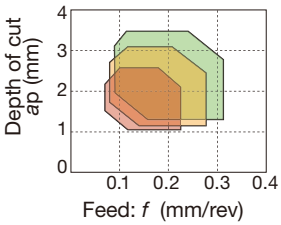

Description	Grade AH725	*W*±0.05	*L*	*rε*
ETX4-040	✓	4	8	0.4
ETX5-040	✓	5	10	0.4
ETX6-040	✓	6	12	0.4

✓ : Stocked items

Note: See page 9 for more information about grades.

EGM

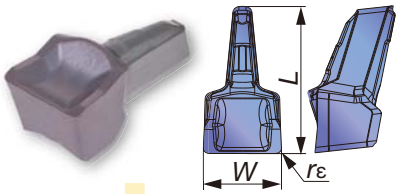

■Standard feed for grooving

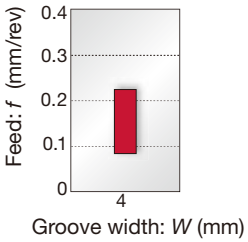

Description	Grade AH725	*W*±0.05	*L*	*rε*
EGM4-030	✓	4	8	0.3

✓ : Stocked items

Note: See page 9 for more information about grades.

PARTS FOR COOLANT HOSE

Connecting hose

Fig. 1

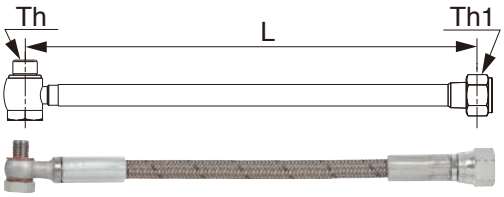

Fig. 2

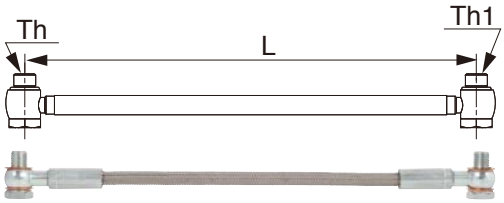

Designation	Length L	Threading size Th	Threading size Th1	Max. pressure (MPa)	Fig.
CHP-HOSE-G1/8-7/16-200BS	200	G1/8"-28 BSPP	7/16"-20 UNF	26	1
CHP-HOSE-G1/8-7/16-250BS	250	G1/8"-28 BSPP	7/16"-20 UNF	26	1
CHP-HOSE-5/16-7/16-200BS	200	5/16"-24UNF	7/16"-20 UNF	20	1
CHP-HOSE-5/16-G1/8-200BS	200	5/16"-24UNF	G1/8"-28 BSPP	20	1
CHP-HOSE-G1/8-G1/8-200BB	200	G1/8"-28 BSPP	G1/8"-28 BSPP	26	2
CHP-HOSE-G1/8-G1/8-250BB	250	G1/8"-28 BSPP	G1/8"-28 BSPP	26	2

Connector

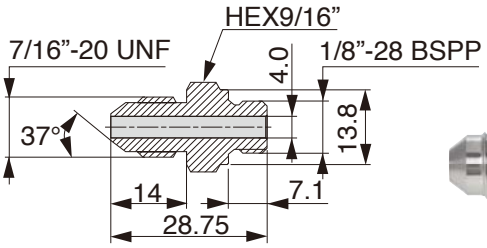

Designation
CHP-NIPPLE-G1/8-7/16UNF

Seal washer

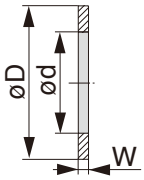

Designation	øD	ød	W
CHP-COPPER-SEAL1/8	15	8	1
CHP-COPPER-SEAL5/16	11	8	1
CHP-COPPER-SEAL5/16-2.5	11	8	2.5

Connector for small lathe with seal washer

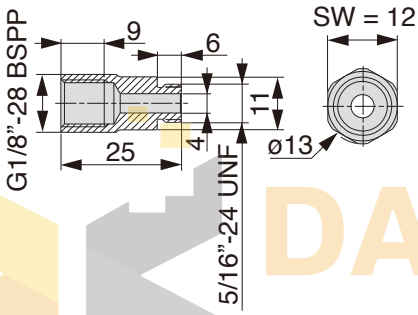

Designation
CHP-CONECTOR/5/16-G1/8

TUNGHEAVYGROOVE
TUNGALOY

Highly rigid clamping for wide grooving and profiling

TungHeavyGroove delivers long tool life due to stable lever-clamping system in dovetail structure.

- Easy insert clamping
Indexing can be operated from the front face of the toolholder, reducing time to change inserts and machine downtime.

- Excellent chip evacuation
Excellent chip control and low cutting force in wide grooving due to the uniquely designed chipbreaker and large rake angle.
Lack of obstacle on the rake face leads to smooth chip evacuation.

- High productivity with the insert for profiling
The insert for wide profiling covers a broad application range and reduces time for machining complex shape by operation in one pass..

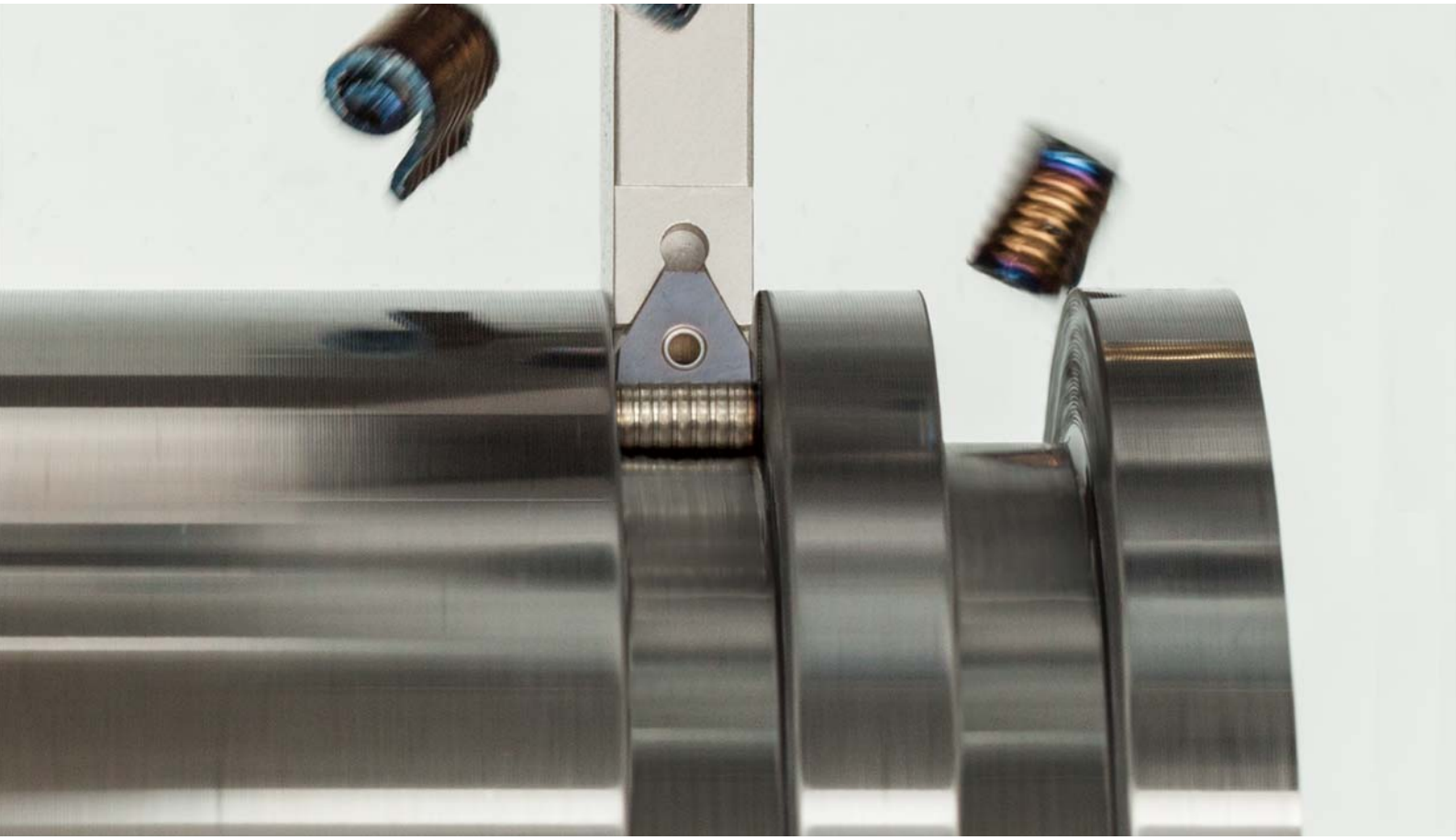

TUNGFORCE GROOVE
ACCELERATED MACHINING

Line up:

Inserts
PSGM type inserts with chipbreaker
Grooving width: 10 (0.394”), 15 (0.590”), 20 (0.787”), 25 mm (0.984”)
AH725 grade suitable for a wide range of materials, such as steel and alloy steel

PSGB type blanks
Grooving width: 10.2 (0.402”), 15.2 (0.598”), 20.2 (0.795”), 25.2 mm (0.992”)
UX30 and TH10 grades used for various workpiece materials, such as steel, stainless steel, and non-ferrous metal
Also offered in specially-ground shape upon request, used for finish profiling

Two types of toolholders: lever-lock type and screw-on type

Shank size: 12 mm (0.500”) to 25 mm (1.000”), suitable for various machines, including small lathes

Maximum groove depth: 20 mm (0.787”) to 36 mm (1.417”)


PSGB blank


PSGB (example)


PSGM

Lever lock type for external grooving

TOOLHOLDERS - FOR EXTERNAL WIDE GROOVING

TungHeavyGroove FPGR

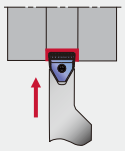

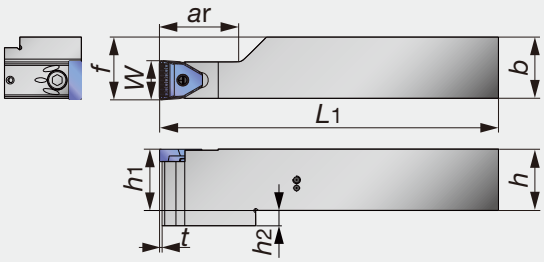

Designation	W	ar		h1	b	h	L1		f	h2	t		Insert (*1)
		PSGB	PSGM				PSGB	PSGM			PSGB	PSGM	
FPGR2525M-10T20	10	25	20	25	25	25	155	150	25.5	-	5.5	0.5	PSG**10
FPGR3232P-10T36	10	41	36	32	32	32	175	170	32.5	-	5.5	0.5	PSG**10
FPGR2525M-15T20	15	25	20	25	25	25	155	150	25.5	-	5.5	0.5	PSG**15
FPGR3232P-15T40	15	45	40	32	32	32	175	170	32.5	-	5.5	0.4	PSG**15
FPGR3232P-20T40	20	45	40	32	32	32	175	170	32.5	8	5.5	0.4	PSG**20
FPGR4040R-20T50	20	55	50	40	40	40	205	200	40.5	8	5.5	0.4	PSG**20
FPGR3232P-25T40	25	45	40	32	32	32	175	170	32.5	8	5.5	0.4	PSG**25
FPGR4040R-25T50	25	55	50	40	40	40	205	200	40.5	8	5.5	0.4	PSG**25

(*1) Can be used with both wide grooving and profile grooving inserts

SPARE PARTS


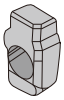

Designation	Clamping screw	Lever	Spring	Wrench
FPGR...-10T**	FCS3	FCL4	BP-5	P-2.5
FPGR...-15T**	FCS3	FCL4	BP-5	P-2.5
FPGR...-20T**	FCS6	FCL8	BP-9	P-5
FPGR...-25T**	FCS6	FCL8	BP-9	P-5

Lever lock type for external wide profile grooving

TOOLHOLDERS - FOR EXTERNAL PROFILE GROOVING

TungHeavyGroove FPGN

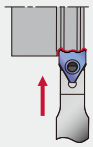

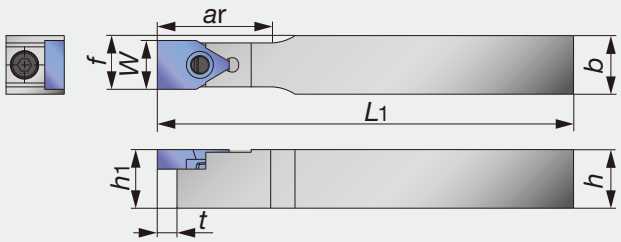

Designation	W	ar		h1	b	h	L1		f	t		Insert (*1)
		PSGB	PSGM				PSGB	PSGM		PSGB	PSGM	
FPGN1212X-10T20	10	25	20	12	12	12	125	120	11.0	5.5	0.5	PSG**10
FPGN1616X-10T20	10	25	20	16	16	16	125	120	13.0	5.5	0.5	PSG**10
FPGN2020K-10T20	10	25	20	20	20	20	130	125	15.0	5.5	0.5	PSG**10
FPGN1616X-15T25	15	30	25	16	16	16	125	120	15.5	5.5	0.4	PSG**15
FPGN2020K-15T25	15	30	25	20	20	20	130	125	17.5	5.5	0.4	PSG**15
FPGN2020K-20T32	20	37	32	20	20	20	130	125	20.0	5.5	0.4	PSG**20
FPGN2525M-20T32	20	37	32	25	25	25	155	150	22.5	5.5	0.4	PSG**20
FPGN2525M-25T36	25	41	36	25	25	25	155	150	25.0	5.5	0.4	PSG**25

(*1) Can be used with both wide grooving and profile grooving inserts

SPARE PARTS


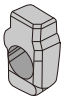

Designation	Clamping screw	Lever	Spring	Wrench
FPGN...-10T**	FCS3	FCL4	BP-5	P-2.5
FPGN...-15T**	FCS3	FCL4	BP-5	P-2.5
FPGN...-20T**	FCS6	FCL8	BP-9	P-5
FPGN...-25T**	FCS6	FCL8	BP-9	P-5

Screw-on type, for external wide profile grooving

TOOLHOLDERS - FOR EXTERNAL PROFILE GROOVING

TungHeavyGroove SPGN

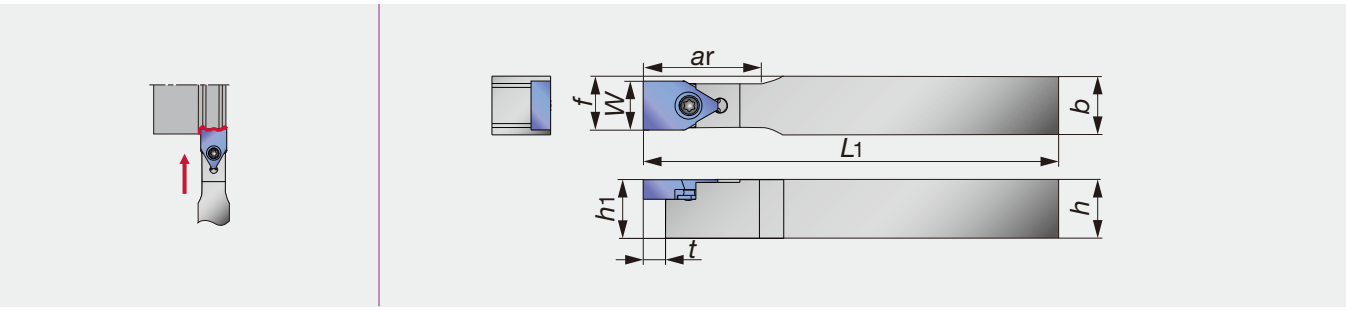

Designation	W	ar	h1	b	h	L1	f	t	Insert (*2)
SPGN1212X-10T20	10	25	12	12	12	125	11.0	5.5	PSGB10
SPGN1616X-10T20	10	25	16	16	16	125	13.0	5.5	PSGB10
SPGN2020K-10T20	10	25	20	20	20	130	15.0	5.5	PSGB10
SPGN1616X-15T25	15	30	16	16	16	125	15.5	5.5	PSGB15
SPGN2020K-15T25	15	30	20	20	20	130	17.5	5.5	PSGB15
SPGN2020K-20T32	20	37	20	20	20	130	20.0	5.5	PSGB20
SPGN2525M-20T32	20	37	25	25	25	155	22.5	5.5	PSGB20
SPGN2525M-25T36	25	41	25	25	25	155	25.0	5.5	PSGB25

(*2) Can be used with profile grooving inserts, only

SPARE PARTS

Designation	Clamping screw	Wrench
SPGN...-10T**	CSTB-3L081	T-9F
SPGN...-15T**	CSTB-4	T-15F
SPGN...-20T**	CSTB-5	T-20F
SPGN...-25T**	CSTB-5	T-20F

INSERTS

For wide grooving

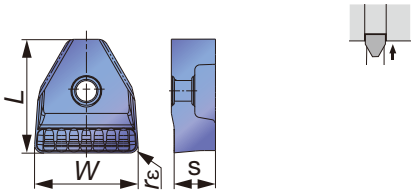

Designation	W ± 0.05	Grade AH725	L	s	rε
PSGM10-08	10	✓	11	4.0	0.8
PSGM15-15	15	✓	15	5.0	1.5
PSGM20-20	20	✓	22	6.5	2.0
PSGM25-20	25	✓	22	6.5	2.0

✓ : Stocked items

Blanks for wide profile grooving*

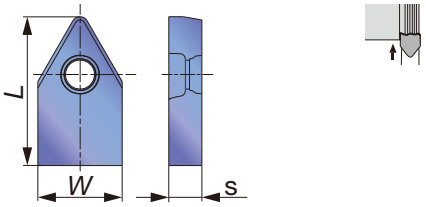

Designation	W ± 0.025	Grade UX30	Grade TH10	L	s
PSGB10	10.2	✓	✓	18	4.0
PSGB15	15.2	✓	✓	20	5.0
PSGB20	20.2	✓	✓	27	6.5
PSGB25	25.2	✓	✓	27	6.5

✓ : Stocked items

*Stocked products are blanks (semi-finished) for formed inserts

STANDARD CUTTING CONDITIONS

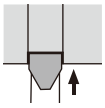

Wide grooving

ISO	Workpiece materials	Hardness (HB)	Grade	Cutting speed Vc (m/min)
P	Alloy steel (SCM440 / 42CrMo4, etc.)	< 300	AH725	50 - 180
	Alloy steel (SCM440 / 42CrMo4, etc.)	< 300	UX30	50 - 120

PSGM type insert	Groove width: W (mm) 10	15	20	25
Feed: f (mm/rev)	0.2 - 0.4	0.2 - 0.4	0.3 - 0.5	0.3 - 0.5

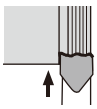

Forming

ISO	Workpiece materials	Hardness (HB)	Grade	Cutting speed Vc (m/min)
P	Steel (S45C / C45, etc.)	< 200	UX30	50 - 150
	Alloy steel (SCM440 / 42CrMo4, etc.)	< 300	UX30	50 - 120
M	Stainless steel (SUS303 / X10CrNiS18-9, etc.)	< 200	UX30	50 - 120
K	Grey cast iron (FC250 / 250, etc.)	-	TH10	50 - 150
	Ductile cast iron (FCD450 / 450-10S, etc.)	-	TH10	50 - 120
N	Aluminium alloy (Si < 12%, etc.)	-	TH10	100 - 500

Holes on the components play a key role in the development of sophisticated items in today's manufacturing industries, and they are becoming deeper, larger, and more precise. The **TunGForce DrillLine** is a revolutionary line-up of drilling solutions that helps improve parameters and also provides accurate holes, good surface quality, and reduced machine downtime. The **TUNGFORCE** behind the revolution is the optimized **Grade** and the **Geometry** of the drill heads and the inserts, which contribute to **Accelerated Machining**.

DrillLine

DRILLFORCEMEISTER
TUNGALOY

2 effective cutting edges boost productivity in drilling large diameters

Going a step further in providing higher productivity and reduced setup time, Tungaloy has developed drills in larger diameter with a unique quick-indexing mechanism.

- **Unique unidirectional clamping of the insert.**

- **Improves repeatability in indexing drill heads**, minimizing run-out in the center of the drills.

- Can be removed from the toolholder without taking off the screw completely.

- Quick indexing on the machine and **high repeatability** reduce machine downtime.

- Fixed screw contact surface directs clamping force to the desired direction, **securing insert clamping**.

- **Excellent chip formation** due to optimized insert geometry leads to smooth chip evacuation.

- **Corner geometry of drill head reduces burr at exit.**

TUNG FORCE DRILL
ACCELERATED MACHINING

Line up:

Drill head SMP…:
Diameters from 26.0 to 41.0 mm (1.024”-1.614”) are available in popular size increments for major applications.

Grade:
AH725 grade with high fracture and wear resistance extends tool life.
PremiumGTec coating on AH725 reduces built-up edge and improves chip evacuation.

Drill bodies:
TIS flange type: Available in L/D=3 and 5
Each drill body is applicable for cutting heads in the diameter range of 1 mm (0.0393")

SMP...

DRILL - L/D = 3

DrillForce-Meister TIS L/D =3

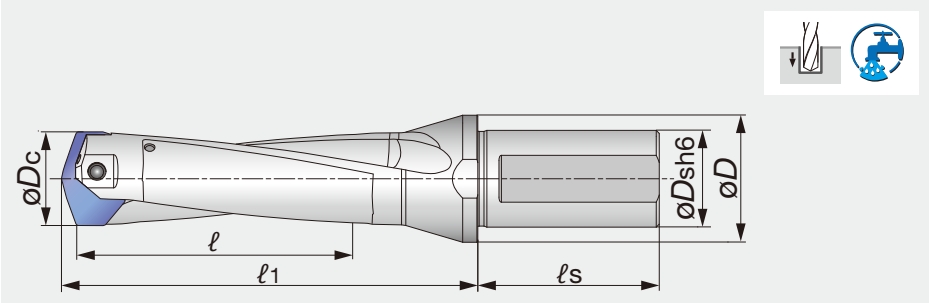

Designation	øDc min	øDc max	øDs	øD	ℓ	ℓ1	ℓs	Po. Size	Coolant	Head
TIS260F32-3	26.00	26.90	32.0	40.00	78.00	117.0	60.0	26	Y	SMP26*
TIS270F32-3	27.00	27.90	32.0	40.00	81.00	120.0	60.0	27	Y	SMP27*
TIS280F32-3	28.00	28.90	32.0	40.00	84.00	128.4	60.0	28	Y	SMP28*
TIS290F32-3	29.00	29.90	32.0	40.00	87.00	131.4	60.0	29	Y	SMP29*
TIS300F32-3	30.00	30.90	32.0	42.00	90.00	134.7	60.0	30	Y	SMP30*
TIS310F32-3	31.00	31.90	32.0	42.00	93.00	137.7	60.0	31	Y	SMP31*
TIS320F40-3	32.00	32.90	40.0	48.00	96.00	143.0	68.0	32	Y	SMP32*
TIS330F40-3	33.00	33.90	40.0	48.00	99.00	146.0	68.0	33	Y	SMP33*
TIS340F40-3	34.00	34.90	40.0	48.00	102.00	149.0	68.0	34	Y	SMP34*
TIS350F40-3	35.00	35.90	40.0	48.00	105.00	152.4	68.0	35	Y	SMP35*
TIS360F40-3	36.00	36.90	40.0	48.00	108.00	155.4	68.0	36	Y	SMP36*
TIS370F40-3	37.00	37.90	40.0	48.00	111.00	158.4	68.0	37	Y	SMP37*
TIS380F40-3	38.00	38.90	40.0	50.00	114.00	166.9	68.0	38	Y	SMP38*
TIS390F40-3	39.00	39.90	40.0	50.00	117.00	169.9	68.0	39	Y	SMP39*
TIS400F40-3	40.00	41.00	40.0	50.00	120.00	172.9	68.0	40	Y	SMP40*

SPARE PARTS



Designation	Clamping screw	Wrench	
		Torx Bit	Grip
TIS260F32-*	TS50230D3	BLDT20/S7	H-TB2W
TIS270F32-*	TS50230D3	BLDT20/S7	H-TB2W
TIS280F32-*	TS50250D35	BLDT25/S7	H-TB2W
TIS290F32-*	TS50250D35	BLDT25/S7	H-TB2W
TIS300F32-*	TS60265D4	BLDT25/S7	H-TB2W
TIS310F32-*	TS60265D4	BLDT25/S7	H-TB2W
TIS320F40-*	TS60285D42	BLDT25/S7	H-TB2W
TIS330F40-*	TS60285D42	BLDT25/S7	H-TB2W
TIS340F40-*	TS60285D42	BLDT25/S7	H-TB2W
TIS350F40-*	TS60320D5	BLDT25/S7	H-TB2W
TIS360F40-*	TS60320D5	BLDT25/S7	H-TB2W
TIS370F40-*	TS60320D5	BLDT25/S7	H-TB2W
TIS380F40-*	TS80340D6	BLDT25/S7	H-TB2W
TIS390F40-*	TS80340D6	BLDT25/S7	H-TB2W
TIS400F40-*	TS80340D6	BLDT25/S7	H-TB2W

øDc	Hole diameter tolerance
ø26.0 - ø29.9	+0.05 / 0
ø30.0 - ø41.0	+0.06 / 0

Head indexable large drill

DRILL - L/D = 5

DrillForce-Meister TIS L/D = 5

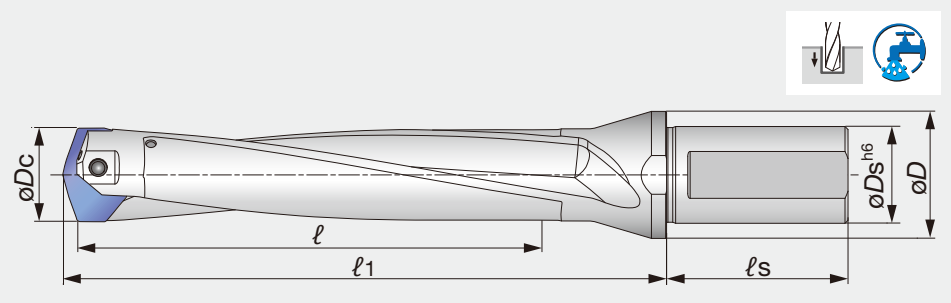

Designation	øDc min	øDc max	øDs	øD	ℓ	ℓ1	ℓs	Po. Size	Coolant	Head
TIS260F32-5	26.00	26.90	32.0	40.00	130.00	169.0	60.0	26	Y	SMP26*
TIS270F32-5	27.00	27.90	32.0	40.00	135.00	174.0	60.0	27	Y	SMP27*
TIS280F32-5	28.00	28.90	32.0	40.00	140.00	184.4	60.0	28	Y	SMP28*
TIS290F32-5	29.00	29.90	32.0	40.00	145.00	189.4	60.0	29	Y	SMP29*
TIS300F32-5	30.00	30.90	32.0	42.00	150.00	194.7	60.0	30	Y	SMP30*
TIS310F32-5	31.00	31.90	32.0	42.00	155.00	199.7	60.0	31	Y	SMP31*
TIS320F40-5	32.00	32.90	40.0	48.00	160.00	207.0	68.0	32	Y	SMP32*
TIS330F40-5	33.00	33.90	40.0	48.00	165.00	212.0	68.0	33	Y	SMP33*
TIS340F40-5	34.00	34.90	40.0	48.00	170.00	217.0	68.0	34	Y	SMP34*
TIS350F40-5	35.00	35.90	40.0	48.00	175.00	222.4	68.0	35	Y	SMP35*
TIS360F40-5	36.00	36.90	40.0	48.00	180.00	227.4	68.0	36	Y	SMP36*
TIS370F40-5	37.00	37.90	40.0	48.00	185.00	232.4	68.0	37	Y	SMP37*
TIS380F40-5	38.00	38.90	40.0	50.00	190.00	242.9	68.0	38	Y	SMP38*
TIS390F40-5	39.00	39.90	40.0	50.00	195.00	247.9	68.0	39	Y	SMP39*
TIS400F40-5	40.00	41.00	40.0	50.00	200.00	252.9	68.0	40	Y	SMP40*

SPARE PARTS



Designation	Clamping screw	Wrench	
		Torx Bit	Grip
TIS260F32-*	TS50230D3	BLDT20/S7	H-TB2W
TIS270F32-*	TS50230D3	BLDT20/S7	H-TB2W
TIS280F32-*	TS50230D35	BLDT25/S7	H-TB2W
TIS290F32-*	TS50230D35	BLDT25/S7	H-TB2W
TIS300F32-*	TS60265D4	BLDT25/S7	H-TB2W
TIS310F32-*	TS60265D4	BLDT25/S7	H-TB2W
TIS320F40-*	TS60285D42	BLDT25/S7	H-TB2W
TIS330F40-*	TS60285D42	BLDT25/S7	H-TB2W
TIS340F40-*	TS60285D42	BLDT25/S7	H-TB2W
TIS350F40-*	TS60320D5	BLDT25/S7	H-TB2W
TIS360F40-*	TS60320D5	BLDT25/S7	H-TB2W
TIS370F40-*	TS60320D5	BLDT25/S7	H-TB2W
TIS380F40-*	TS80340D6	BLDT25/S7	H-TB2W
TIS390F40-*	TS80340D6	BLDT25/S7	H-TB2W
TIS400F40-*	TS80340D6	BLDT25/S7	H-TB2W

øDc	Hole diameter tolerance
ø26.0 - ø29.9	+0.08 / 0
ø30.0 - ø41.0	+0.09 / 0

DRILL HEAD

SMP

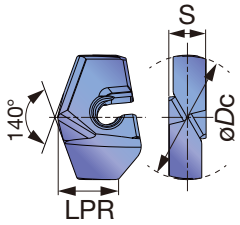

Tool diameter	ø26.0 - ø29.9	ø30.0 - ø41.0
Head diameter tolerance	-0.006 / -0.026	-0.006 / -0.031

Designation	øDc	Grade AH725	S	LPR	Pocket size	Applicable body
SMP260	26.0	✓	7.5	11.6	26	TIS260F32-*
SMP261	26.1	✓	7.5	11.6	26	TIS260F32-*
SMP265	26.5	✓	7.5	11.6	26	TIS260F32-*
SMP267	26.7	✓	7.5	11.6	26	TIS260F32-*
SMP270	27.0	✓	7.5	11.1	27	TIS270F32-*
SMP271	27.1	✓	7.5	11.1	27	TIS270F32-*
SMP272	27.2	✓	7.5	11.1	27	TIS270F32-*
SMP275	27.5	✓	7.5	11.1	27	TIS270F32-*
SMP280	28.0	✓	8.0	11.7	28	TIS280F32-*
SMP281	28.1	✓	8.0	11.7	28	TIS280F32-*
SMP285	28.5	✓	8.0	11.7	28	TIS280F32-*
SMP286	28.6	✓	8.0	11.7	28	TIS280F32-*
SMP290	29.0	✓	8.0	11.3	29	TIS290F32-*
SMP291	29.1	✓	8.0	11.3	29	TIS290F32-*
SMP295	29.5	✓	8.0	11.3	29	TIS290F32-*
SMP296	29.6	✓	8.0	11.3	29	TIS290F32-*
SMP300	30.0	✓	8.5	14.1	30	TIS300F32-*
SMP301	30.1	✓	8.5	14.1	30	TIS300F32-*
SMP302	30.2	✓	8.5	14.1	30	TIS300F32-*
SMP303	30.3	✓	8.5	14.1	30	TIS300F32-*
SMP305	30.5	✓	8.5	14.1	30	TIS300F32-*
SMP308	30.8	✓	8.5	14.1	30	TIS300F32-*
SMP310	31.0	✓	8.5	13.7	31	TIS310F32-*
SMP311	31.1	✓	8.5	13.7	31	TIS310F32-*
SMP315	31.5	✓	8.5	13.7	31	TIS310F32-*
SMP318	31.8	✓	8.5	13.7	31	TIS310F32-*
SMP320	32.0	✓	9.0	14.5	32	TIS320F40-*
SMP321	32.1	✓	9.0	14.5	32	TIS320F40-*
SMP325	32.5	✓	9.0	14.5	32	TIS320F40-*
SMP328	32.8	✓	9.0	14.5	32	TIS320F40-*
SMP330	33.0	✓	9.0	14.1	33	TIS330F40-*
SMP331	33.1	✓	9.0	14.1	33	TIS330F40-*
SMP333	33.3	✓	9.0	14.1	33	TIS330F40-*
SMP335	33.5	✓	9.0	14.1	33	TIS330F40-*
SMP340	34.0	✓	9.0	13.7	34	TIS340F40-*
SMP341	34.1	✓	9.0	13.7	34	TIS340F40-*
SMP345	34.5	✓	9.0	13.7	34	TIS340F40-*
SMP349	34.9	✓	9.0	13.7	34	TIS340F40-*
SMP350	35.0	✓	10.0	16.6	35	TIS350F40-*
SMP351	35.1	✓	10.0	16.6	35	TIS350F40-*
SMP355	35.5	✓	10.0	16.6	35	TIS350F40-*

Designation	øDc	Grade AH725	S	LPR	Pocket size	Applicable body
SMP360	36.0	✓	10.0	16.1	36	TIS360F40-*
SMP361	36.1	✓	10.0	16.1	36	TIS360F40-*
SMP365	36.5	✓	10.0	16.1	36	TIS360F40-*
SMP366	36.6	✓	10.0	16.1	36	TIS360F40-*
SMP370	37.0	✓	10.0	15.7	37	TIS370F40-*
SMP371	37.1	✓	10.0	15.7	37	TIS370F40-*
SMP375	37.5	✓	10.0	15.7	37	TIS370F40-*
SMP380	38.0	✓	10.5	17.0	38	TIS380F40-*
SMP381	38.1	✓	10.5	17.0	38	TIS380F40-*
SMP385	38.5	✓	10.5	17.0	38	TIS380F40-*
SMP388	38.8	✓	10.5	17.0	38	TIS380F40-*
SMP390	39.0	✓	10.5	16.6	39	TIS390F40-*
SMP391	39.1	✓	10.5	16.6	39	TIS390F40-*
SMP395	39.5	✓	10.5	16.6	39	TIS390F40-*
SMP397	39.7	✓	10.5	16.6	39	TIS390F40-*
SMP398	39.8	✓	10.5	16.6	39	TIS390F40-*
SMP400	40.0	✓	10.5	16.2	40	TIS400F40-*
SMP401	40.1	✓	10.5	16.2	40	TIS400F40-*
SMP405	40.5	✓	10.5	16.2	40	TIS400F40-*
SMP410	41.0	✓	10.5	16.2	40	TIS400F40-*

✓ : Stocked items

Note: See page 9 for more information about grades.

STANDARD CUTTING CONDITIONS

ISO	Workpiece materials	Cutting speed *Vc* (m/min)	Feed: *f* (mm/rev) øDc (mm)		
			26 - 29.9	30.0 - 35.9	36.0 - 41.0
P	Low carbon steels C15, C20, etc.	80 - 140	0.2 - 0.5	0.2 - 0.5	0.2 - 0.55
	Carbon steels, Alloy steels C55, 42CrMoS4, etc.	80 - 130	0.2 - 0.5	0.2 - 0.5	0.2 - 0.55
	Prehardened steels NAK80, PX5, etc.	50 - 100	0.2 - 0.5	0.2 - 0.5	0.2 - 0.55
M	Stainless steels X5CrNi18-9, X5CrNiMo17-12-2, etc	40 - 80	0.15 - 0.3	0.15 - 0.3	0.2 - 0.35
K	Grey cast irons 250, 300, etc.	80 - 180	0.25 - 0.55	0.25 - 0.55	0.3 - 0.6
	Ductile cast irons 400-15, 600-3, etc.	80 - 140	0.25 - 0.55	0.25 - 0.55	0.3 - 0.6
N	Non ferrous materials	100 - 200	0.4 - 0.6	0.4 - 0.6	0.5 - 0.7
S	Heat-resistant alloy Inconel718, etc.	20 - 50	0.1 - 0.2	0.1 - 0.2	0.1 - 0.25
	Titanium alloys Ti-6Al-4V, etc.	30 - 60	0.1 - 0.2	0.1 - 0.2	0.1 - 0.25
H	Hardened materials	20 - 60	0.1 - 0.2	0.1 - 0.2	0.1 - 0.25

DRILLMEISTER
TUNGALOY

Full effective head-exchangeable drill for efficient holemaking

Quick head indexing on the machine reduces setup time and machine downtime.

- **Optimized geometry** of insert and drill head:

- **Excellent chip formation** due to the optimized insert geometry leads to smooth chip evacuation.

- Corner geometry of drill head **reduces burr at exit**.

- **Minimal chattering** due to the optimized honing and gash angles.

- Dovetail clamping structure improves clamping **rigidity as well as reliability** and also simplifies the setup of the inserts.

- **High-precision holes** as those of solid drills:

- The drill head is equipped with land margin for self-guidance and self-centering.

- Rigid drill holder prevents deformation even after repeatedly mounting/dismounting drill heads.

- TIDCF chamfer holder **combines drilling and chamfering**, reducing machining time.

- No regrinding cost + Less tool inventory = Decreased machining cost

TUNGFORCE DRILL
ACCELERATED MACHINING

Line up:

Drill head DMP…:
Available from øDc 10.0 to 25.9 mm (0.394” to 1.02”) in the increment of 0.1 mm (0.004”)

Grade:
AH725 grade with high fracture and wear resistance extends tool life. PremiumTec coating on AH725 reduces built-up edge and improves chip evacuation.

Drill bodies:
TID flange type: Available in L/D=1.5, 3, 5, and 8 in metric and inch shank sizes. Improves clamping rigidity and covers high-feed applications.

TIDC straight type drills: Suitable for using with chamfer holders
TIDCF chamfer holder: Used with TIDC drills, combining drilling and chamfering with 3 types of inserts in chamfering angle 30°, 45°, and 60°

The drilling range has been expanded for L/D=12 to be used in collets or hydrogrips for improved concentricity and hole accuracy in long and deep drilling.

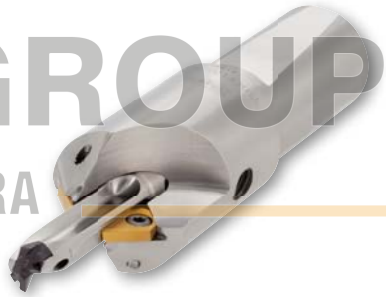

Chamfering adaptor

DMP Type

DRILL TID L/D = 1.5

DrillMeister TID L/D = 1.5

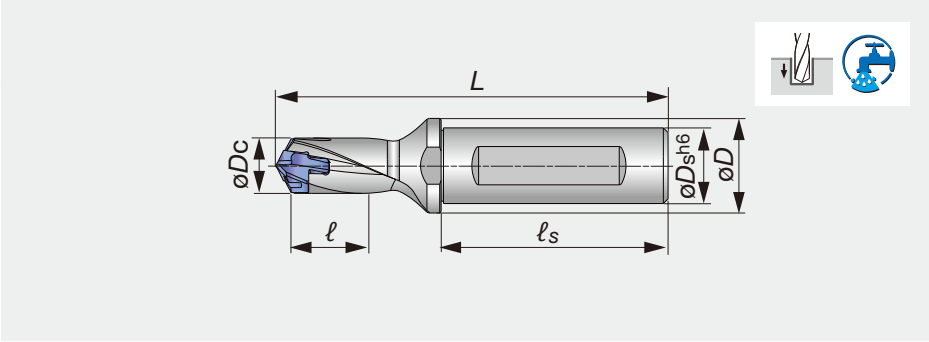

Designation	øDc	øDs	øD	ℓ	ℓs	L	Pocket size	Applicable head
TID100F16-1.5	10.0 - 10.9	16	20	15	48	79.2	10	DMP100 - DMP109
TID110F16-1.5	11.0 - 11.9	16	20	17	48	81.1	11	DMP110 - DMP119
TID120F16-1.5	12.0 - 12.9	16	20	18	48	83.0	12	DMP120 - DMP129
TID130F16-1.5	13.0 - 13.9	16	20	20	48	85.1	13	DMP130 - DMP139
TID140F16-1.5	14.0 - 14.9	16	20	21	48	89.1	14	DMP140 - DMP149
TID150F20-1.5	15.0 - 15.9	20	25	23	50	96.2	15	DMP150 - DMP159
TID160F20-1.5	16.0 - 16.9	20	25	24	50	99.3	16	DMP160 - DMP169
TID170F20-1.5	17.0 - 17.9	20	25	26	50	102.4	17	DMP170 - DMP179
TID180F25-1.5	18.0 - 18.9	25	32	27	56	111.5	18	DMP180 - DMP189
TID190F25-1.5	19.0 - 19.9	25	32	29	56	114.5	19	DMP190 - DMP199
TID200F25-1.5	20.0 - 20.9	25	32	30	56	117.6	20	DMP200 - DMP209
TID210F25-1.5	21.0 - 21.9	25	32	32	56	120.7	21	DMP210 - DMP219
TID220F25-1.5	22.0 - 22.9	25	32	33	56	123.8	22	DMP220 - DMP229
TID230F32-1.5	23.0 - 23.9	32	42	35	60	130.8	23	DMP230 - DMP239
TID240F32-1.5	24.0 - 24.9	32	42	36	60	133.9	24	DMP240 - DMP249
TID250F32-1.5	25.0 - 25.9	32	42	38	60	137	25	DMP250 - DMP259

øDc	Hole diameter tolerance
ø10.0 - ø17.9	+0.05 / 0
ø18.0 - ø25.9	+0.05 / 0

SPARE PARTS

Drill diameter	Clamping key (included)
ø10.0 - ø19.9	K-TID10-19.99
ø20.0 - ø25.9	K-TID20-26.99

Indexable head drill

DRILL TID L/D = 3

DrillMeister TID L/D = 3

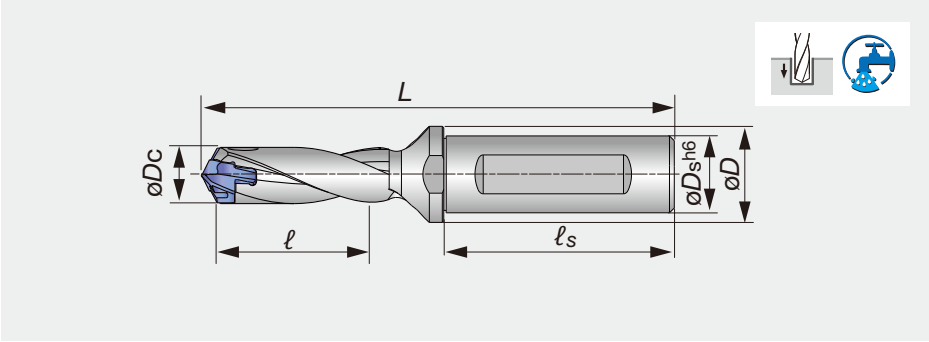

Designation	øDc	øDs	øD	ℓ	ℓs	L	Pocket size	Applicable head
TID100F16-3	10.0 - 10.4	16	20	30	48	94.2	10	DMP100 - DMP104
TID105F16-3	10.5 - 10.9	16	20	32	48	95.7	10	DMP105 - DMP109
TID110F16-3	11.0 - 11.4	16	20	33	48	97.6	11	DMP110 - DMP114
TID115F16-3	11.5 - 11.9	16	20	35	48	99.1	11	DMP115 - DMP119
TID120F16-3	12.0 - 12.4	16	20	36	48	101.0	12	DMP120 - DMP124
TID125F16-3	12.5 - 12.9	16	20	37	48	102.5	12	DMP125 - DMP129
TID130F16-3	13.0 - 13.4	16	20	39	48	104.6	13	DMP130 - DMP134
TID135F16-3	13.5 - 13.9	16	20	41	48	106.1	13	DMP135 - DMP139
TID140F16-3	14.0 - 14.4	16	20	42	48	110.1	14	DMP140 - DMP144
TID145F16-3	14.5 - 14.9	16	20	44	48	111.6	14	DMP145 - DMP149
TID150F20-3	15.0 - 15.9	20	25	45	50	118.7	15	DMP150 - DMP159
TID160F20-3	16.0 - 16.9	20	25	48	50	123.3	16	DMP160 - DMP169
TID170F20-3	17.0 - 17.9	20	25	51	50	127.9	17	DMP170 - DMP179
TID180F25-3	18.0 - 18.9	25	32	54	56	138.5	18	DMP180 - DMP189
TID190F25-3	19.0 - 19.9	25	32	57	56	143.0	19	DMP190 - DMP199
TID200F25-3	20.0 - 20.9	25	32	60	56	147.6	20	DMP200 - DMP209
TID210F25-3	21.0 - 21.9	25	32	63	56	152.2	21	DMP210 - DMP219
TID220F25-3	22.0 - 22.9	25	32	66	56	156.8	22	DMP220 - DMP229
TID230F32-3	23.0 - 23.9	32	42	69	60	165.3	23	DMP230 - DMP239
TID240F32-3	24.0 - 24.9	32	42	72	60	169.9	24	DMP240 - DMP249
TID250F32-3	25.0 - 25.9	32	42	75	60	174.5	25	DMP250 - DMP259

øDc	Hole diameter tolerance
ø10.0 - ø17.9	+0.05 / 0
ø18.0 - ø25.9	+0.05 / 0

SPARE PARTS

Drill diameter	Clamping key (included)
ø10.0 - ø19.9	K-TID10-19.99
ø20.0 - ø25.9	K-TID20-26.99

DRILL TID L/D = 5

DrillMeister TID L/D = 5

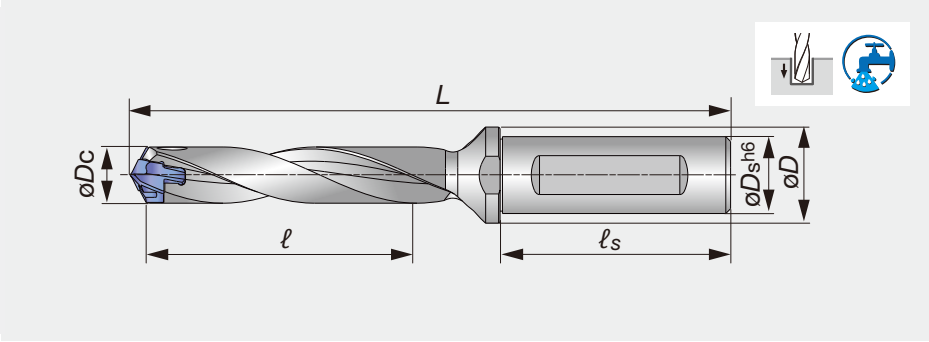

Designation	øDc	øDs	øD	ℓ	ℓs	L	Pocket size	Applicable head
TID100F16-5	10.0 - 10.4	16	20	50	48	114.2	10	DMP100 - DMP104
TID105F16-5	10.5 - 10.9	16	20	53	48	116.7	10	DMP105 - DMP109
TID110F16-5	11.0 - 11.4	16	20	55	48	119.6	11	DMP110 - DMP114
TID115F16-5	11.5 - 11.9	16	20	58	48	122.1	11	DMP115 - DMP119
TID120F16-5	12.0 - 12.4	16	20	60	48	125.0	12	DMP120 - DMP124
TID125F16-5	12.5 - 12.9	16	20	62	48	127.5	12	DMP125 - DMP129
TID130F16-5	13.0 - 13.4	16	20	65	48	130.6	13	DMP130 - DMP134
TID135F16-5	13.5 - 13.9	16	20	68	48	133.1	13	DMP135 - DMP139
TID140F16-5	14.0 - 14.4	16	20	70	48	138.2	14	DMP140 - DMP144
TID145F16-5	14.5 - 14.9	16	20	73	48	140.7	14	DMP145 - DMP149
TID150F20-5	15.0 - 15.9	20	25	75	50	148.7	15	DMP150 - DMP159
TID160F20-5	16.0 - 16.9	20	25	80	50	155.3	16	DMP160 - DMP169
TID170F20-5	17.0 - 17.9	20	25	85	50	161.9	17	DMP170 - DMP179
TID180F25-5	18.0 - 18.9	25	32	90	56	174.5	18	DMP180 - DMP189
TID190F25-5	19.0 - 19.9	25	32	95	56	181.0	19	DMP190 - DMP199
TID200F25-5	20.0 - 20.9	25	32	100	56	187.6	20	DMP200 - DMP209
TID210F25-5	21.0 - 21.9	25	32	105	56	194.2	21	DMP210 - DMP219
TID220F25-5	22.0 - 22.9	25	32	110	56	200.8	22	DMP220 - DMP229
TID230F32-5	23.0 - 23.9	32	42	115	60	211.3	23	DMP230 - DMP239
TID240F32-5	24.0 - 24.9	32	42	120	60	217.9	24	DMP240 - DMP249
TID250F32-5	25.0 - 25.9	32	42	125	60	224.5	25	DMP250 - DMP259

øDc	Hole diameter tolerance
ø10.0 - ø17.9	+0.06 / 0
ø18.0 - ø25.9	+0.065 / 0

SPARE PARTS

Drill diameter	Clamping key (included)
ø10.0 - ø19.9	K-TID10-19.99
ø20.0 - ø25.9	K-TID20-26.99

Indexable head drill

DRILL TID L/D = 8

DrillMeister TID L/D = 8

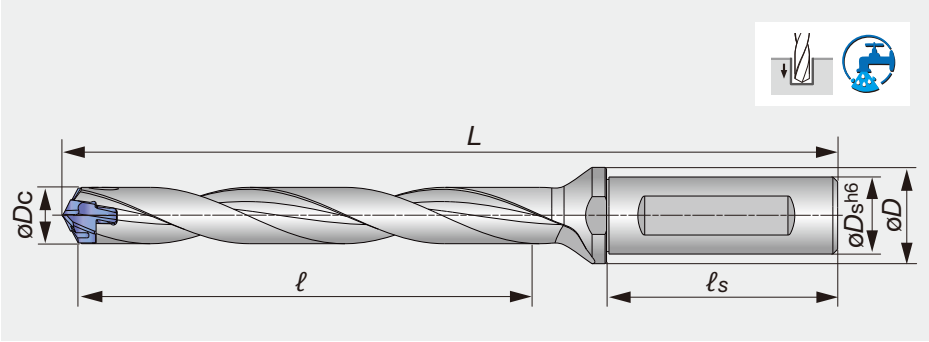

Designation	øDc	øDs	øD	ℓ	ℓs	L	Pocket size	Applicable head
TID100F16-8	10.0 - 10.4	16	20	80	48	144.2	10	DMP100 - DMP104
TID105F16-8	10.5 - 10.9	16	20	84	48	148.2	10	DMP105 - DMP109
TID110F16-8	11.0 - 11.4	16	20	88	48	152.6	11	DMP110 - DMP114
TID115F16-8	11.5 - 11.9	16	20	92	48	156.6	11	DMP115 - DMP119
TID120F16-8	12.0 - 12.4	16	20	96	48	161.0	12	DMP120 - DMP124
TID125F16-8	12.5 - 12.9	16	20	100	48	165.0	12	DMP125 - DMP129
TID130F16-8	13.0 - 13.4	16	20	104	48	169.6	13	DMP130 - DMP134
TID135F16-8	13.5 - 13.9	16	20	108	48	173.6	13	DMP135 - DMP139
TID140F16-8	14.0 - 14.4	16	20	112	48	180.1	14	DMP140 - DMP144
TID145F16-8	14.5 - 14.9	16	20	116	48	184.2	14	DMP145 - DMP149
TID150F20-8	15.0 - 15.9	20	25	120	50	193.7	15	DMP150 - DMP159
TID160F20-8	16.0 - 16.9	20	25	128	50	203.3	16	DMP160 - DMP169
TID170F20-8	17.0 - 17.9	20	25	136	50	212.9	17	DMP170 - DMP179
TID180F25-8	18.0 - 18.9	25	32	144	56	228.5	18	DMP180 - DMP189
TID190F25-8	19.0 - 19.9	25	32	152	56	238.0	19	DMP190 - DMP199
TID200F25-8	20.0 - 20.9	25	32	160	56	247.6	20	DMP200 - DMP209
TID210F25-8	21.0 - 21.9	25	32	168	56	257.2	21	DMP210 - DMP219
TID220F25-8	22.0 - 22.9	25	32	176	56	266.8	22	DMP220 - DMP229
TID230F32-8	23.0 - 23.9	32	42	184	60	280.3	23	DMP230 - DMP239
TID240F32-8	24.0 - 24.9	32	42	192	60	289.9	24	DMP240 - DMP249
TID250F32-8	25.0 - 25.9	32	42	200	60	299.5	25	DMP250 - DMP259

øDc	Hole diameter tolerance
ø10.0 - ø17.9	+0.07 / 0
ø18.0 - ø25.9	+0.085 / 0

SPARE PARTS

Drill diameter	Clamping key (included)
ø10.0 - ø19.9	K-TID10-19.99
ø20.0 - ø25.9	K-TID20-26.99

DRILL TIDC L/D = 3

DrillMeister TIDC L/D = 3

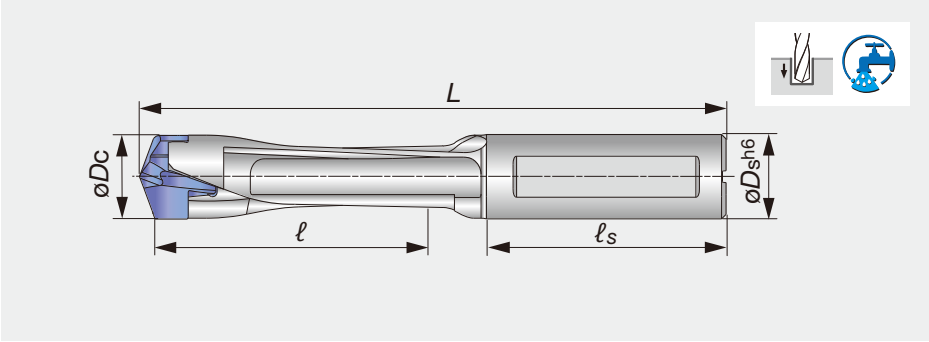

Designation	øDc	øDs	ℓ	ℓs	L	Pocket size	Applicable head
TIDC100C10-3	10.0 - 10.4	10	30.0	43	85.0	10	DMP100 - DMP104
TIDC105C11-3	10.5 - 10.9	11	31.5	43	87.1	10	DMP105 - DMP109
TIDC110C11-3	11.0 - 11.4	11	33.0	43	89.2	11	DMP110 - DMP114
TIDC115C12-3	11.5 - 11.9	12	34.5	43	91.3	11	DMP115 - DMP119
TIDC120C12-3	12.0 - 12.4	12	36.0	43	95.0	12	DMP120 - DMP124
TIDC125C13-3	12.5 - 12.9	13	37.5	43	95.5	12	DMP125 - DMP129
TIDC130C13-3	13.0 - 13.4	13	39.0	45	99.6	13	DMP130 - DMP134
TIDC135C14-3	13.5 - 13.9	14	40.5	45	101.7	13	DMP135 - DMP139
TIDC140C14-3	14.0 - 14.4	14	42.0	45	103.8	14	DMP140 - DMP144
TIDC145C15-3	14.5 - 14.9	15	43.5	45	105.9	14	DMP145 - DMP149
TIDC150C15-3	15.0 - 15.9	15	45.0	45	108.0	15	DMP150 - DMP159
TIDC160C16-3	16.0 - 16.9	16	48.0	48	117.7	16	DMP160 - DMP169
TIDC170C17-3	17.0 - 17.9	17	51.0	48	119.4	17	DMP170 - DMP179
TIDC180C18-3	18.0 - 18.9	18	54.0	48	123.3	18	DMP180 - DMP189
TIDC190C19-3	19.0 - 19.9	19	57.0	54	132.2	19	DMP190 - DMP199

øDc	Hole diameter tolerance
ø10.0 - ø19.9	+0.05 / 0

SPARE PARTS

Drill diameter	Clamping key (included)
ø10.0 - ø19.9	K-TID10-19.99

DRILL TIDC L/D = 5

DrillMeister TIDC L/D = 5

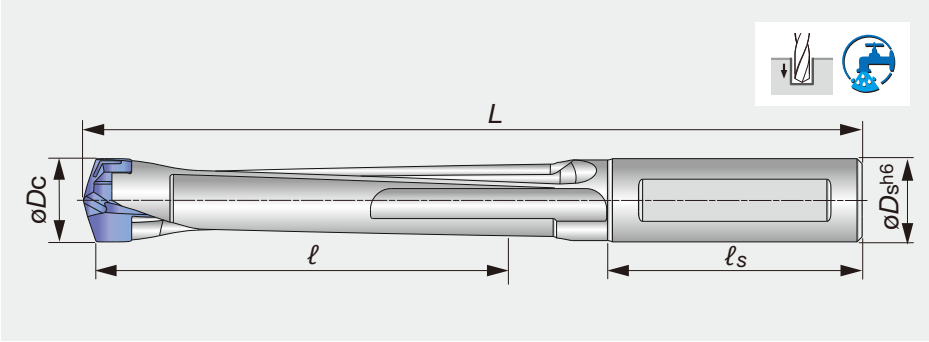

Designation	øDc	øDs	ℓ	ℓs	L	Pocket size	Applicable head
TIDC100C10-5	10.0 - 10.4	10	50.0	43	105.0	10	DMP100 - DMP104
TIDC105C11-5	10.5 - 10.9	11	52.5	43	108.1	10	DMP105 - DMP109
TIDC110C11-5	11.0 - 11.4	11	55.0	43	111.2	11	DMP110 - DMP114
TIDC115C12-5	11.5 - 11.9	12	57.5	43	114.3	11	DMP115 - DMP119
TIDC120C12-5	12.0 - 12.4	12	60.0	43	119.0	12	DMP120 - DMP124
TIDC125C13-5	12.5 - 12.9	13	62.5	43	120.5	12	DMP125 - DMP129
TIDC130C13-5	13.0 - 13.4	13	65.0	45	125.6	13	DMP130 - DMP134
TIDC135C14-5	13.5 - 13.9	14	67.5	45	128.7	13	DMP135 - DMP139
TIDC140C14-5	14.0 - 14.4	14	70.0	45	131.8	14	DMP140 - DMP144
TIDC145C15-5	14.5 - 14.9	15	72.5	45	134.9	14	DMP145 - DMP149
TIDC150C15-5	15.0 - 15.9	15	75.0	45	138.0	15	DMP150 - DMP159
TIDC160C16-5	16.0 - 16.9	16	80.0	48	149.7	16	DMP160 - DMP169
TIDC170C17-5	17.0 - 17.9	17	85.0	48	153.4	17	DMP170 - DMP179
TIDC180C18-5	18.0 - 18.9	18	90.0	48	159.6	18	DMP180 - DMP189
TIDC190C19-5	19.0 - 19.9	19	95.0	54	170.2	19	DMP190 - DMP199

øDc	Hole diameter tolerance
ø10.0 - ø19.9	+0.05 / 0

SPARE PARTS

Drill diameter	Clamping key (included)
ø10.0 - ø19.9	K-TID10-19.99

CHAMFERING ADAPTOR

TIDC TYPE

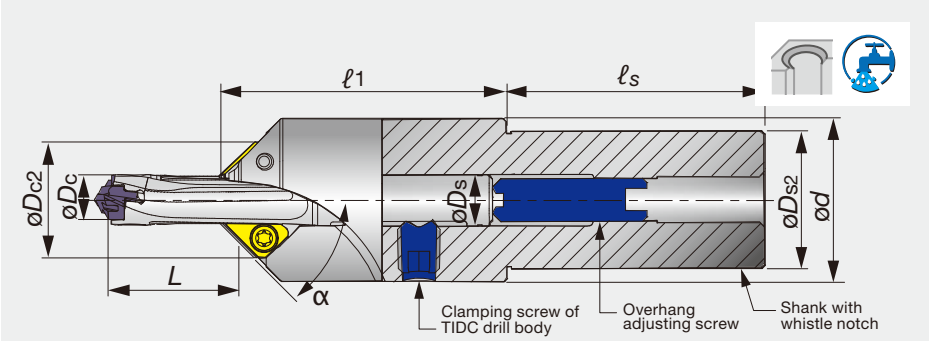

Designation	øDc	øDs2	ød	øDc2	ℓ1	ℓs	L* L/D = 3	L* L/D = 5	Applicable drill body	øDs
TIDCF100-W32	10.0 - 10.4	32	38	24.9	67.3	60	14.5 - 31.8	31.7 - 51.8	TIDC100C10-...	10
TIDCF110-W32	10.5 - 10.9	32	38	25.9	67.3	60	15.7 - 33.3	31.2 - 54.2	TIDC105C11-...	11
TIDCF110-W32	11.0 - 11.4	32	38	25.9	67.3	60	16.2 - 35.3	34.1 - 57.3	TIDC110C11-...	11
TIDCF120-W32	11.5 - 11.9	32	38	26.9	67.3	60	15.1 - 36.7	33.8 - 59.4	TIDC115C12-...	12
TIDCF120-W32	12.0 - 12.4	32	38	26.9	67.3	60	16.5 - 37.7	36.6 - 61.6	TIDC120C12-...	12
TIDCF130-W32	12.5 - 12.9	32	38	27.9	67.3	60	16.1 - 39.6	39.7 - 64.8	TIDC125C13-...	13
TIDCF130-W32	13.0 - 13.4	32	38	27.9	67.3	60	17.5 - 41.5	42.7 - 68.0	TIDC130C13-...	13
TIDCF140-W32	13.5 - 13.9	32	38	28.4	67.3	60	17.7 - 42.9	41.4 - 70.3	TIDC135C14-...	14
TIDCF140-W32	14.0 - 14.4	32	38	28.4	67.3	60	18.1 - 45.0	44.8 - 73.1	TIDC140C14-...	14
TIDCF150-W32	14.5 - 14.9	32	38	29.4	67.3	60	19.2 - 44.6	44.0 - 73.9	TIDC145C15-...	15
TIDCF150-W32	15.0 - 15.9	32	38	29.4	67.3	60	19.7 - 47.4	47.6 - 80.7	TIDC150C15-...	15
TIDCF160-W32	16.0 - 16.9	32	38	30.4	67.3	60	19.5 - 55.3	57.0 - 87.5	TIDC160C16-...	16
TIDCF170-W32	17.0 - 17.9	32	38	31.4	67.3	60	21.4 - 54.9	55.9 - 88.5	TIDC170C17-...	17
TIDCF180-W32	18.0 - 18.9	32	38	32.4	67.3	60	24.2 - 65.2	60.0 - 93.0	TIDC180C18-...	18
TIDCF190-W32	19.0 - 19.9	32	38	33.4	75.0	60	28.5 - 62.3	67.0 - 100.0	TIDC190C19-...	19

L * is the dimension when using 45° chamfering insert

CHAMFERING INSERT

XHGT-30A

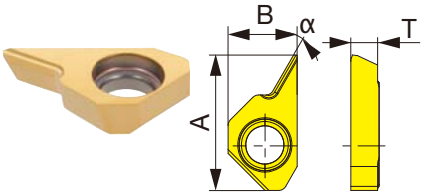

XHGR-45A

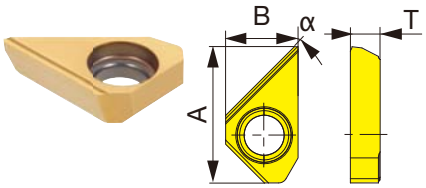

XHGR-60A

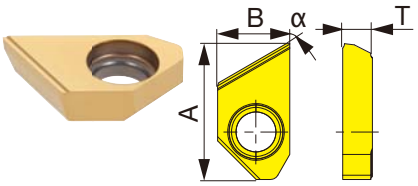

Designation	Grade GH730	A	B	T	Chamfering angle α	Maximum width of chamfer **
XHGT090300-30A	✓	16	8.8	3.3	30°	1.5
XHGR090300-45A	✓	16	8.8	3.3	45°	6.0
XHGR090300-60A	✓	16	8.8	3.3	60°	3.5

**Please reduce the feed rate to half when chamfering over 60% of maximum width of chamfer

✓ : Stocked items
Package quantity = 2 pcs.

DRILL HEAD

DMP

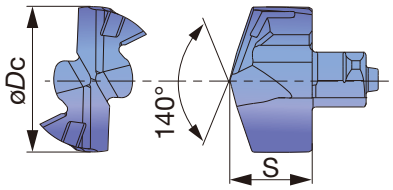

Tool diameter	ø10.0 - ø17.9	ø18.0 - ø25.9
Head diameter tolerance	+0.018 / 0	+0.021 / 0

Designation	øDc	Grade AH725	S	Pocket size	Applicable body
DMP100	10.0	✓	6.05	10	TID*100*
DMP101	10.1	✓	6.05	10	TID*100*
DMP102	10.2	✓	6.05	10	TID*100*
DMP103	10.3	✓	6.05	10	TID*100*
DMP104	10.4	✓	6.05	10	TID*100*
DMP105	10.5	✓	6.05	10	TID*105*
DMP106	10.6	✓	6.05	10	TID*105*
DMP107	10.7	✓	6.05	10	TID*105*
DMP108	10.8	✓	6.05	10	TID*105*
DMP109	10.9	✓	6.05	10	TID*105*
DMP110	11.0	✓	6.45	11	TID*110*
DMP111	11.1	✓	6.45	11	TID*110*
DMP112	11.2	✓	6.45	11	TID*110*
DMP113	11.3	✓	6.45	11	TID*110*
DMP114	11.4	✓	6.45	11	TID*110*
DMP115	11.5	✓	6.45	11	TID*115*
DMP116	11.6	✓	6.45	11	TID*115*
DMP117	11.7	✓	6.45	11	TID*115*
DMP118	11.8	✓	6.45	11	TID*115*
DMP119	11.9	✓	6.45	11	TID*115*
DMP120	12.0	✓	6.80	12	TID*120*
DMP121	12.1	✓	6.80	12	TID*120*
DMP122	12.2	✓	6.80	12	TID*120*
DMP123	12.3	✓	6.80	12	TID*120*
DMP124	12.4	✓	6.80	12	TID*120*
DMP125	12.5	✓	6.80	12	TID*125*
DMP126	12.6	✓	6.80	12	TID*125*
DMP127	12.7	✓	6.80	12	TID*125*
DMP128	12.8	✓	6.80	12	TID*125*
DMP129	12.9	✓	6.80	12	TID*125*
DMP130	13.0	✓	7.40	13	TID*130*
DMP131	13.1	✓	7.40	13	TID*130*
DMP132	13.2	✓	7.40	13	TID*130*
DMP133	13.3	✓	7.40	13	TID*130*
DMP134	13.4	✓	7.40	13	TID*130*
DMP135	13.5	✓	7.40	13	TID*135*
DMP136	13.6	✓	7.40	13	TID*135*
DMP137	13.7	✓	7.40	13	TID*135*
DMP138	13.8	✓	7.40	13	TID*135*
DMP139	13.9	✓	7.40	13	TID*135*
DMP140	14.0	✓	7.95	14	TID*140*
DMP141	14.1	✓	7.95	14	TID*140*
DMP142	14.2	✓	7.95	14	TID*140*
DMP143	14.3	✓	7.95	14	TID*140*

Designation	øDc	Grade AH725	S	Pocket size	Applicable body
DMP144	14.4	✓	7.95	14	TID*140*
DMP145	14.5	✓	7.95	14	TID*145*
DMP146	14.6	✓	7.95	14	TID*145*
DMP147	14.7	✓	7.95	14	TID*145*
DMP148	14.8	✓	7.95	14	TID*145*
DMP149	14.9	✓	7.95	14	TID*145*
DMP150	15.0	✓	8.53	15	TID*150*
DMP151	15.1	✓	8.53	15	TID*150*
DMP152	15.2	✓	8.53	15	TID*150*
DMP153	15.3	✓	8.53	15	TID*150*
DMP154	15.4	✓	8.53	15	TID*150*
DMP155	15.5	✓	8.53	15	TID*150*
DMP156	15.6	✓	8.53	15	TID*150*
DMP157	15.7	✓	8.53	15	TID*150*
DMP158	15.8	✓	8.53	15	TID*150*
DMP159	15.9	✓	8.53	15	TID*150*
DMP160	16.0	✓	9.10	16	TID*160*
DMP161	16.1	✓	9.10	16	TID*160*
DMP162	16.2	✓	9.10	16	TID*160*
DMP163	16.3	✓	9.10	16	TID*160*
DMP164	16.4	✓	9.10	16	TID*160*
DMP165	16.5	✓	9.10	16	TID*160*
DMP166	16.6	✓	9.10	16	TID*160*
DMP167	16.7	✓	9.10	16	TID*160*
DMP168	16.8	✓	9.10	16	TID*160*
DMP169	16.9	✓	9.10	16	TID*160*
DMP170	17.0	✓	9.70	17	TID*170*
DMP171	17.1	✓	9.70	17	TID*170*
DMP172	17.2	✓	9.70	17	TID*170*
DMP173	17.3	✓	9.70	17	TID*170*
DMP174	17.4	✓	9.70	17	TID*170*
DMP175	17.5	✓	9.70	17	TID*170*
DMP176	17.6	✓	9.70	17	TID*170*
DMP177	17.7	✓	9.70	17	TID*170*
DMP178	17.8	✓	9.70	17	TID*170*
DMP179	17.9	✓	9.70	17	TID*170*
DMP180	18.0	✓	10.30	18	TID*180*
DMP181	18.1	✓	10.30	18	TID*180*
DMP182	18.2	✓	10.30	18	TID*180*
DMP183	18.3	✓	10.30	18	TID*180*
DMP184	18.4	✓	10.30	18	TID*180*
DMP185	18.5	✓	10.30	18	TID*180*
DMP186	18.6	✓	10.30	18	TID*180*
DMP187	18.7	✓	10.30	18	TID*180*

Designation	øDc	Grade AH725	S	Pocket size	Applicable body
DMP188	18.8	✓	10.30	18	TID*180*
DMP189	18.9	✓	10.30	18	TID*180*
DMP190	19.0	✓	10.80	19	TID*190*
DMP191	19.1	✓	10.80	19	TID*190*
DMP192	19.2	✓	10.80	19	TID*190*
DMP193	19.3	✓	10.80	19	TID*190*
DMP194	19.4	✓	10.80	19	TID*190*
DMP195	19.5	✓	10.80	19	TID*190*
DMP196	19.6	✓	10.80	19	TID*190*
DMP197	19.7	✓	10.80	19	TID*190*
DMP198	19.8	✓	10.80	19	TID*190*
DMP199	19.9	✓	10.80	19	TID*190*
DMP200	20.0	✓	11.40	20	TID*200*
DMP201	20.1	✓	11.40	20	TID*200*
DMP202	20.2	✓	11.40	20	TID*200*
DMP203	20.3	✓	11.40	20	TID*200*
DMP204	20.4	✓	11.40	20	TID*200*
DMP205	20.5	✓	11.40	20	TID*200*
DMP206	20.6	✓	11.40	20	TID*200*
DMP207	20.7	✓	11.40	20	TID*200*
DMP208	20.8	✓	11.40	20	TID*200*
DMP209	20.9	✓	11.40	20	TID*200*
DMP210	21.0	✓	11.98	21	TID*210*
DMP211	21.1	✓	11.98	21	TID*210*
DMP212	21.2	✓	11.98	21	TID*210*
DMP213	21.3	✓	11.98	21	TID*210*
DMP214	21.4	✓	11.98	21	TID*210*
DMP215	21.5	✓	11.98	21	TID*210*
DMP216	21.6	✓	11.98	21	TID*210*
DMP217	21.7	✓	11.98	21	TID*210*
DMP218	21.8	✓	11.98	21	TID*210*
DMP219	21.9	✓	11.98	21	TID*210*
DMP220	22.0	✓	12.56	22	TID*220*
DMP221	22.1	✓	12.56	22	TID*220*
DMP222	22.2	✓	12.56	22	TID*220*
DMP223	22.3	✓	12.56	22	TID*220*
DMP224	22.4	✓	12.56	22	TID*220*
DMP225	22.5	✓	12.56	22	TID*220*
DMP226	22.6	✓	12.56	22	TID*220*
DMP227	22.7	✓	12.56	22	TID*220*
DMP228	22.8	✓	12.56	22	TID*220*
DMP229	22.9	✓	12.56	22	TID*220*
DMP230	23.0	✓	13.13	23	TID*230*
DMP231	23.1	✓	13.13	23	TID*230*

Designation	øDc	Grade AH725	S	Pocket size	Applicable body
DMP232	23.2	✓	13.13	23	TID*230*
DMP233	23.3	✓	13.13	23	TID*230*
DMP234	23.4	✓	13.13	23	TID*230*
DMP235	23.5	✓	13.13	23	TID*230*
DMP236	23.6	✓	13.13	23	TID*230*
DMP237	23.7	✓	13.13	23	TID*230*
DMP238	23.8	✓	13.13	23	TID*230*
DMP239	23.9	✓	13.13	23	TID*230*
DMP240	24.0	✓	13.70	24	TID*240*
DMP241	24.1	✓	13.70	24	TID*240*
DMP242	24.2	✓	13.70	24	TID*240*
DMP243	24.3	✓	13.70	24	TID*240*
DMP244	24.4	✓	13.70	24	TID*240*
DMP245	24.5	✓	13.70	24	TID*240*
DMP246	24.6	✓	13.70	24	TID*240*
DMP247	24.7	✓	13.70	24	TID*240*
DMP248	24.8	✓	13.70	24	TID*240*
DMP249	24.9	✓	13.70	24	TID*240*
DMP250	25.0	✓	14.30	25	TID*250*
DMP251	25.1	✓	14.30	25	TID*250*
DMP252	25.2	✓	14.30	25	TID*250*
DMP253	25.3	✓	14.30	25	TID*250*
DMP254	25.4	✓	14.30	25	TID*250*
DMP255	25.5	✓	14.30	25	TID*250*
DMP256	25.6	✓	14.30	25	TID*250*
DMP257	25.7	✓	14.30	25	TID*250*
DMP258	25.8	✓	14.30	25	TID*250*
DMP259	25.9	✓	14.30	25	TID*250*

✓ : Stocked items

Note: See page 9 for more information about grades.

STANDARD CUTTING CONDITIONS

ISO	Workpiece material	Cutting speed	Feed: *f* (mm/rev)				
			ø*Dc* (mm)				
		Vc (m/min)	ø10 - ø11.9	ø12 - ø13.9	ø14 - ø15.9	ø16 - ø19.9	ø20 - ø25.9
P	Low carbon steels (C < 0.3) SS400 / St42-1, SM490 / St52-3, S25C / C25, etc.	80 - 140	0.15 - 0.28	0.18 - 0.30	0.20 - 0.35	0.25 - 0.45	0.25 - 0.45
P	High carbon steels (C > 0.3) S45C / C45, S55C / C55, etc.	70 - 120	0.15 - 0.28	0.18 - 0.30	0.20 - 0.35	0.25 - 0.45	0.25 - 0.45
P	Low alloy steels SCM415, etc.	70 - 120	0.14 - 0.28	0.16 - 0.32	0.18 - 0.35	0.23 - 0.40	0.25 - 0.45
P	Alloy steels SCM440 / 42CrMo4, SCr420 / 20Cr4, etc.	40 - 90	0.14 - 0.28	0.16 - 0.32	0.18 - 0.35	0.23 - 0.40	0.25 - 0.45
M	Stainless steels SUS304 / X5CrNi18-9, SUS316 / X5CrNiMo17-12-2, etc.	30 - 70	0.12 - 0.18	0.14 - 0.20	0.16 - 0.24	0.16 - 0.26	0.18 - 0.30
K	Grey cast irons FC250 / GG25, etc.	80 - 180	0.20 - 0.35	0.25 - 0.40	0.30 - 0.45	0.35 - 0.55	0.35 - 0.60
K	Ductile cast irons FCD700 / GGG70, etc.	80 - 140	0.20 - 0.35	0.25 - 0.40	0.30 - 0.45	0.35 - 0.55	0.35 - 0.60
N	Aluminium alloys ADC12, etc.	80 - 220	0.25 - 0.40	0.30 - 0.45	0.35 - 0.50	0.40 - 0.60	0.50 - 0.75
S	Titanium alloys Ti-6Al-4V, etc.	20 - 50	0.08 - 0.15	0.10 - 0.28	0.12 - 0.20	0.14 - 0.22	0.18 - 0.27
S	Nickel-based alloys	20 - 50	0.08 - 0.13	0.10 - 0.15	0.12 - 0.18	0.12 - 0.22	0.14 - 0.22

- Cutting conditions in the above table show standard cutting conditions.
- Cutting conditions may change due to the rigidity and power of the machine and the workpiece material.
- Machined hole diameter may change depending upon the rigidity of the machine tool or cutting conditions.
- In case of L/D = 8 drill, the recommended range of cutting speeds and feeds is between the minimum and median values listed above.

MEMO

TUNGSIX-DRILL

TUNGALOY

Inserts with 6 cutting edges, the most economical drill in the market

The world's first indexable drill, featuring uniquely designed double-sided insert, offers highly economical drilling with enhanced stability and long tool life.

- **Double-sided insert with 6 cutting edges:**

- **One type of the insert** is applicable for both **central** and **peripheral** pockets to simplify the inventory, instead of managing two different types of the inserts.

- **Optimized geometries of central and peripheral cutting edges**

- **Positive land geometry** reduces cutting force to the level comparable with the competitor's single-sided inserts.

- The **obtuse relief angle** on the corner of the central cutting edge increases the insert's strength and **fracture resistance.**

- New **AH9030** and **AH6030 grades improve tool life** compared to the competitors even when drilling at high speed and feed rate.

- Pocket design ensures correct insert positioning in peripheral and central pockets.

- **Twisted coolant holes** allow the cross section of flutes to be large and increase coolant volume.

- Drill range is from øDc 20 to 80 mm.

TUNG FORCE DRILL
ACCELERATED MACHINING

Line up:

Inserts:
Available in the sizes of WWMU05, 06, 07, 08, 09, 11, and 13
Each has 6 cutting edges

Drill bodies:
TDS : Available in L/D=2, 3, and 4 in metric and inch shank sizes from øDc 20 to 55 (0.75" to 2.00")
TDB.. : Suitable for large diameters offered in the cartridge design from øDc 54 to 80 mm (2.25" to 3.157") in L/D=2.5

Grades:
AH9030: Ideal for steel and cast iron
AH6030: Ideal for stainless steel and superalloys, such as titanium and Inconel
PremiumTec coating reduces chip welding and promotes smooth chip flow

Chipbreakers:
DJ: Well-designed and suited for general steel, cast iron, and hard materials
DS: The first choice for mild steel, such as stainless steel and low-carbon steel

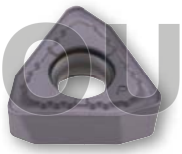
WWMU-DJ


WWMU-DS

DRILL L/D = 2

TungSix-Drill TDS-F, L/D = 2

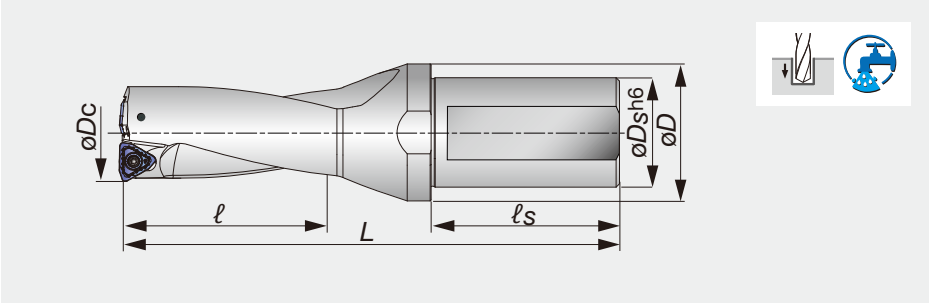

Machined hole diameter may change depending upon the rigidity of the machine tool or cutting conditions.

Designation	øDc	øDs	øD	ℓ	ℓs	L	Offset	Kg	Insert
TDS200F25-2	20.0	25	32	40	54	115.0	1.0	0.3	WWMU05X205R-D*
TDS205F25-2	20.5	25	32	41	54	116.5	0.9	0.3	WWMU05X205R-D*
TDS210F25-2	21.0	25	32	42	54	118.0	0.8	0.3	WWMU05X205R-D*
TDS215F25-2	21.5	25	32	43	54	119.0	0.6	0.3	WWMU05X205R-D*
TDS220F25-2	22.0	25	32	44	54	120.0	0.5	0.3	WWMU05X205R-D*
TDS225F25-2	22.5	25	37	45	54	121.5	0.4	0.3	WWMU05X205R-D*
TDS230F25-2	23.0	25	37	46	54	123.0	0.3	0.4	WWMU05X205R-D*
TDS235F25-2	23.5	25	37	47	54	124.0	0.2	0.4	WWMU05X205R-D*
TDS240F25-2	24.0	25	37	48	54	125.0	1.2	0.4	WWMU060306R-D*
TDS245F25-2	24.5	25	37	49	54	126.5	1.0	0.4	WWMU060306R-D*
TDS250F25-2	25.0	25	37	50	54	128.0	0.8	0.4	WWMU060306R-D*
TDS255F25-2	25.5	25	37	51	54	129.5	0.6	0.4	WWMU060306R-D*
TDS260F25-2	26.0	25	37	52	54	131.0	0.5	0.4	WWMU060306R-D*
TDS270F32-2	27.0	32	40	54	59	138.0	0.3	0.6	WWMU060306R-D*
TDS280F32-2	28.0	32	40	56	59	141.0	1.3	0.6	WWMU08X408R-D*
TDS290F32-2	29.0	32	40	58	59	143.0	1.1	0.7	WWMU08X408R-D*
TDS300F32-2	30.0	32	40	60	59	146.0	0.8	0.7	WWMU08X408R-D*
TDS310F32-2	31.0	32	40	62	59	149.0	0.5	0.7	WWMU08X408R-D*
TDS320F32-2	32.0	32	40	64	59	151.0	0.2	0.8	WWMU08X408R-D*
TDS330F40-2	33.0	40	50	66	69	164.0	1.7	1.2	WWMU09X510R-D*
TDS340F40-2	34.0	40	50	68	69	167.0	1.4	1.2	WWMU09X510R-D*
TDS350F40-2	35.0	40	50	70	69	170.0	1.2	1.2	WWMU09X510R-D*
TDS360F40-2	36.0	40	50	72	69	173.0	0.9	1.3	WWMU09X510R-D*
TDS370F40-2	37.0	40	50	74	69	174.0	0.7	1.3	WWMU09X510R-D*
TDS380F40-2	38.0	40	50	76	69	177.0	0.4	1.3	WWMU09X510R-D*
TDS390F40-2	39.0	40	50	78	69	179.0	2.2	1.4	WWMU11X512R-D*
TDS400F40-2	40.0	40	50	80	69	182.0	1.9	1.4	WWMU11X512R-D*
TDS410F40-2	41.0	40	50	82	69	186.0	1.7	1.5	WWMU11X512R-D*
TDS420F40-2	42.0	40	55	84	69	188.0	1.5	1.6	WWMU11X512R-D*
TDS430F40-2	43.0	40	55	86	69	191.0	1.3	1.6	WWMU11X512R-D*
TDS440F40-2	44.0	40	55	88	69	193.0	1.0	1.7	WWMU11X512R-D*
TDS450F40-2	45.0	40	55	90	69	196.0	0.7	1.7	WWMU11X512R-D*
TDS460F40-2	46.0	40	55	92	69	199.0	0.4	1.8	WWMU11X512R-D*

Designation	øDc	øDs	øD	ℓ	ℓs	L	Offset	Kg	Insert
TDS470F40-2	47.0	40	55	94	69	201.0	2.6	1.9	WWMU13X512R-D*
TDS480F40-2	48.0	40	55	96	69	204.0	2.4	1.9	WWMU13X512R-D*
TDS490F40-2	49.0	40	55	98	69	206.0	2.2	1.9	WWMU13X512R-D*
TDS500F40-2	50.0	40	55	100	69	209.0	2.0	2.0	WWMU13X512R-D*
TDS510F40-2	51.0	40	55	102	69	213.0	1.7	2.1	WWMU13X512R-D*
TDS520F40-2	52.0	40	55	104	69	215.0	1.5	2.2	WWMU13X512R-D*
TDS530F40-2	53.0	40	55	106	69	218.0	1.3	2.3	WWMU13X512R-D*
TDS540F40-2	54.0	40	55	108	69	220.0	1.0	2.4	WWMU13X512R-D*

øDc	Tool diameter tolerance	Hole diameter tolerance
ø20.0 - ø27.0	+ 0.2 / 0	+ 0.25 / 0
ø28.0 - ø54.0	+ 0.2 / 0	+ 0.30 / 0

SPARE PARTS

Designation	Clamping screw	Mono block type wrench
TDS200** - TDS235**	CSTB-2.2	IP-7D
TDS240** - TDS270**	CSTB-2.5	IP-8D
TDS280** - TDS320**	CSTB-3	IP-9D
TDS330** - TDS380**	CSTB-4	IP-15D
TDS390** - TDS540**	CSTB-5	IP-20D

TUNGSIX-DRILL

L/D=3, Flat cotter, Tool dia. 20 - 54 mm

DRILL L/D = 3

TungSix-Drill TDS-F, L/D = 3

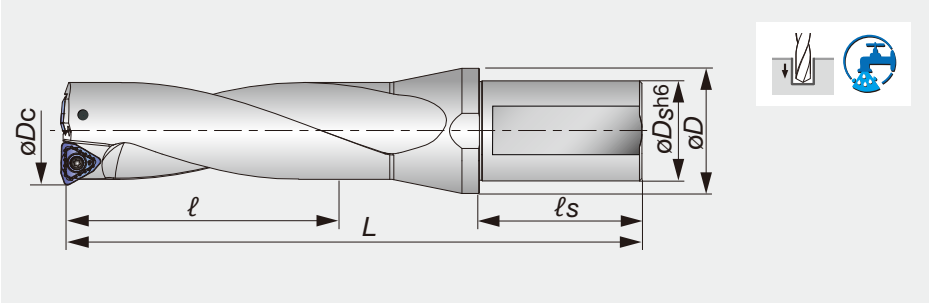

Machined hole diameter may change depending upon the rigidity of the machine tool or cutting conditions.

Designation	øDc	øDs	øD	ℓ	ℓs	L	Offset	Kg	Insert
TDS200F25-3	20.0	25	32	60.0	54	135.0	1.0	0.3	WWMU05X205R-D*
TDS205F25-3	20.5	25	32	61.5	54	136.0	0.9	0.3	WWMU05X205R-D*
* TDS209F25-3	20.9	25	32	62.7	54	138.0	0.8	0.3	WWMU05X205R-D*
TDS210F25-3	21.0	25	32	63.0	54	138.0	0.8	0.4	WWMU05X205R-D*
TDS215F25-3	21.5	25	32	64.5	54	140.0	0.6	0.4	WWMU05X205R-D*
TDS220F25-3	22.0	25	32	66.0	54	141.0	0.5	0.4	WWMU05X205R-D*
**TDSU0875F25-3	22.2	25	32	66.0	54	141.0	0.4	0.4	WWMU05X205R-D*
TDS225F25-3	22.5	25	37	67.5	54	144.0	0.4	0.4	WWMU05X205R-D*
TDS230F25-3	23.0	25	37	69.0	54	145.0	0.3	0.4	WWMU05X205R-D*
TDS235F25-3	23.5	25	37	70.5	54	147.0	0.2	0.4	WWMU05X205R-D*
* TDS239F25-3	23.9	25	37	71.7	54	149.0	1.2	0.4	WWMU060306R-D*
TDS240F25-3	24.0	25	37	72.0	54	149.0	1.2	0.4	WWMU060306R-D*
TDS245F25-3	24.5	25	37	73.5	54	151.0	1.0	0.5	WWMU060306R-D*
TDS250F25-3	25.0	25	37	75.0	54	153.0	0.8	0.5	WWMU060306R-D*
TDS255F25-3	25.5	25	37	76.5	54	154.0	0.6	0.5	WWMU060306R-D*
* TDS260F25-3	26.0	25	37	78.0	54	156.0	0.5	0.5	WWMU060306R-D*
TDS264F32-3	26.4	32	40	79.2	59	162.5	0.4	0.6	WWMU060306R-D*
TDS265F32-3	26.5	32	40	79.5	59	162.5	0.4	0.6	WWMU060306R-D*
TDS270F32-3	27.0	32	40	81.0	59	164.0	0.3	0.6	WWMU060306R-D*
TDS275F32-3	27.5	32	40	82.0	59	167.0	0.0	0.6	WWMU08X408R-D*
TDS280F32-3	28.0	32	40	84.0	59	168.0	1.3	0.7	WWMU08X408R-D*
TDS285F32-3	28.5	32	40	85.0	59	170.0	1.1	0.7	WWMU08X408R-D*
**TDSU1125F32-3	28.6	32	40	86.0	59	171.0	1.1	0.7	WWMU08X408R-D*
TDS290F32-3	29.0	32	40	87.0	59	171.0	1.1	0.7	WWMU08X408R-D*
TDS295F32-3	29.5	32	40	88.0	59	175.0	0.8	0.7	WWMU08X408R-D*
TDS300F32-3	30.0	32	40	90.0	59	176.0	0.8	0.8	WWMU08X408R-D*
TDS305F32-3	30.5	32	40	91.0	59	180.0	0.5	0.8	WWMU08X408R-D*
TDS310F32-3	31.0	32	40	93.0	59	180.0	0.5	0.8	WWMU08X408R-D*
**TDSU1250F32-3	31.8	32	40	95.0	59	183.0	0.2	0.8	WWMU08X408R-D*
TDS320F32-3	32.0	32	40	96.0	59	183.0	0.2	0.9	WWMU08X408R-D*

* For pre thread hole (mm): *øDc* = 20.9 mm: M24x3, *øDc* = 23.9 mm: M27x3, *øDc* = 26.4 mm: M30x3.5

** For inch size: *øDc*: 22.2 mm = 0.875", *øDc*: 28.6 mm = 1.125", *øDc*: 31.8 mm = 1.250"

Designation	øDc	øDs	øD	ℓ	ℓs	L	Offset	Kg	Insert
TDS330F40-3	33.0	40	50	99.0	69	197.0	1.7	1.3	WWMU09X510R-D*
TDS340F40-3	34.0	40	50	102.0	69	200.0	1.4	1.3	WWMU09X510R-D*
TDS350F40-3	35.0	40	50	105.0	69	204.0	1.2	1.3	WWMU09X510R-D*
TDS360F40-3	36.0	40	50	108.0	69	208.0	0.9	1.4	WWMU09X510R-D*
TDS370F40-3	37.0	40	50	111.0	69	211.0	0.7	1.4	WWMU09X510R-D*
TDS380F40-3	38.0	40	50	114.0	69	215.0	0.4	1.5	WWMU09X510R-D*
TDS390F40-3	39.0	40	50	117.0	69	218.0	2.2	1.6	WWMU11X512R-D*
TDS400F40-3	40.0	40	50	120.0	69	222.0	1.9	1.6	WWMU11X512R-D*
TDS410F40-3	41.0	40	50	123.0	69	226.0	1.7	1.7	WWMU11X512R-D*
TDS420F40-3	42.0	40	55	126.0	69	229.0	1.5	1.8	WWMU11X512R-D*
TDS430F40-3	43.0	40	55	129.0	69	233.0	1.3	1.8	WWMU11X512R-D*
TDS440F40-3	44.0	40	55	132.0	69	236.0	1.0	1.9	WWMU11X512R-D*
TDS450F40-3	45.0	40	55	135.0	69	241.0	0.7	2.0	WWMU11X512R-D*
TDS460F40-3	46.0	40	55	138.0	69	245.0	0.4	2.1	WWMU11X512R-D*
TDS470F40-3	47.0	40	55	141.0	69	248.0	2.6	2.2	WWMU13X512R-D*
TDS480F40-3	48.0	40	55	144.0	69	252.0	2.4	2.3	WWMU13X512R-D*
TDS490F40-3	49.0	40	55	147.0	69	255.0	2.2	2.3	WWMU13X512R-D*
TDS500F40-3	50.0	40	55	150.0	69	259.0	2.0	2.4	WWMU13X512R-D*
TDS510F40-3	51.0	40	55	153.0	69	263.0	1.7	2.5	WWMU13X512R-D*
TDS520F40-3	52.0	40	55	156.0	69	266.0	1.5	2.6	WWMU13X512R-D*
TDS530F40-3	53.0	40	55	159.0	69	270.0	1.3	2.7	WWMU13X512R-D*
TDS540F40-3	54.0	40	55	162.0	69	273.0	1.0	2.9	WWMU13X512R-D*

øDc	Tool diameter tolerance	Hole diameter tolerance
ø20.0 - ø27.0	+ 0.2 / 0	+ 0.25 / 0
ø28.0 - ø54.0	+ 0.2 / 0	+ 0.30 / 0

SPARE PARTS

Designation	Clamping screw	Mono block type wrench
TDS200** - TDS235**	CSTB-2.2	IP-7D
TDS240** - TDS270**	CSTB-2.5	IP-8D
TDS280** - TDS320**	CSTB-3	IP-9D
TDS330** - TDS380**	CSTB-4	IP-15D
TDS390** - TDS540**	CSTB-5	IP-20D

DRILL L/D = 4

TungSix-Drill TDS-F, L/D = 4

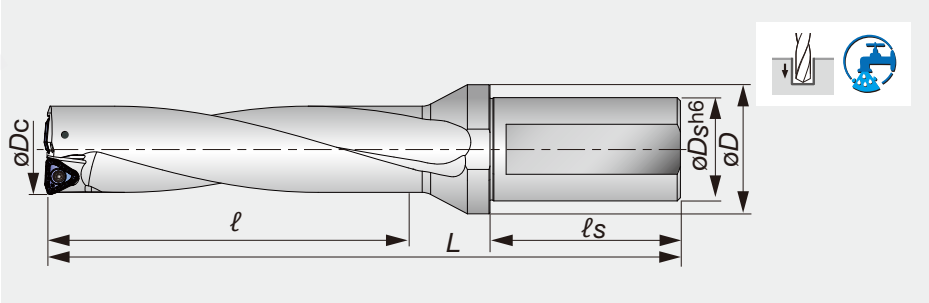

Machined hole diameter may change depending upon the rigidity of the machine tool or cutting conditions.

Designation	øDc	øDs	øD	ℓ	ℓs	L	Offset	Kg	Insert
TDS200F25-4	20.0	25	32	80	54	155.0	1.0	0.4	WWMU05X205R-D*
TDS205F25-4	20.5	25	32	82	54	157.0	0.9	0.4	WWMU05X205R-D*
TDS210F25-4	21.0	25	32	84	54	159.0	0.8	0.4	WWMU05X205R-D*
TDS215F25-4	21.5	25	32	86	54	161.0	0.6	0.4	WWMU05X205R-D*
TDS220F25-4	22.0	25	32	88	54	163.0	0.5	0.4	WWMU05X205R-D*
TDS225F25-4	22.5	25	37	90	54	165.5	0.4	0.4	WWMU05X205R-D*
TDS230F25-4	23.0	25	37	92	54	168.0	0.3	0.4	WWMU05X205R-D*
TDS235F25-4	23.5	25	37	94	54	170.5	0.2	0.5	WWMU05X205R-D*
TDS240F25-4	24.0	25	37	96	54	173.0	1.2	0.5	WWMU060306R-D*
TDS245F25-4	24.5	25	37	98	54	175.5	1.0	0.5	WWMU060306R-D*
TDS250F25-4	25.0	25	37	100	54	178.0	0.8	0.5	WWMU060306R-D*
TDS255F25-4	25.5	25	37	102	54	180.0	0.6	0.6	WWMU060306R-D*
TDS260F25-4	26.0	25	37	104	54	182.0	0.5	0.5	WWMU060306R-D*
TDS270F32-4	27.0	32	40	108	59	191.0	0.3	0.7	WWMU060306R-D*
TDS280F32-4	28.0	32	40	112	59	196.0	1.3	0.8	WWMU08X408R-D*
TDS290F32-4	29.0	32	40	116	59	200.0	1.1	0.8	WWMU08X408R-D*
TDS300F32-4	30.0	32	40	120	59	206.0	0.8	0.9	WWMU08X408R-D*
TDS310F32-4	31.0	32	40	124	59	211.0	0.5	0.9	WWMU08X408R-D*
TDS320F32-4	32.0	32	40	128	59	215.0	0.2	1.0	WWMU08X408R-D*
TDS330F40-4	33.0	40	50	132	69	230.0	1.7	1.4	WWMU09X510R-D*
TDS340F40-4	34.0	40	50	136	69	234.0	1.4	1.4	WWMU09X510R-D*
TDS350F40-4	35.0	40	50	140	69	239.0	1.2	1.4	WWMU09X510R-D*
TDS360F40-4	36.0	40	50	144	69	244.0	0.9	1.5	WWMU09X510R-D*
TDS370F40-4	37.0	40	50	148	69	248.0	0.7	1.5	WWMU09X510R-D*
TDS380F40-4	38.0	40	50	152	69	253.0	0.4	1.7	WWMU09X510R-D*
TDS390F40-4	39.0	40	50	156	69	257.5	2.2	1.8	WWMU11X512R-D*
TDS400F40-4	40.0	40	50	160	69	262.5	1.9	1.8	WWMU11X512R-D*
TDS410F40-4	41.0	40	50	164	69	267.5	1.7	1.9	WWMU11X512R-D*
TDS420F40-4	42.0	40	55	168	69	271.5	1.5	2.0	WWMU11X512R-D*
TDS430F40-4	43.0	40	55	172	69	276.5	1.3	2.0	WWMU11X512R-D*

Designation	øDc	øDs	øD	ℓ	ℓs	L	Offset	Kg	Insert
TDS440F40-4	44.0	40	55	176	69	280.5	1.0	2.1	WWMU11X512R-D*
TDS450F40-4	45.0	40	55	180	69	286.5	0.7	2.3	WWMU11X512R-D*
TDS460F40-4	46.0	40	55	184	69	291.5	0.4	2.4	WWMU11X512R-D*
TDS470F40-4	47.0	40	55	188	69	295.5	2.6	2.5	WWMU13X512R-D*
TDS480F40-4	48.0	40	55	192	69	300.5	2.4	2.7	WWMU13X512R-D*
TDS490F40-4	49.0	40	55	196	69	304.5	2.2	2.7	WWMU13X512R-D*
TDS500F40-4	50.0	40	55	200	69	309.5	2.0	2.8	WWMU13X512R-D*
TDS510F40-4	51.0	40	55	204	69	314.5	1.7	2.9	WWMU13X512R-D*
TDS520F40-4	52.0	40	55	208	69	318.5	1.5	3.0	WWMU13X512R-D*
TDS530F40-4	53.0	40	55	212	69	323.5	1.3	3.1	WWMU13X512R-D*
TDS540F40-4	54.0	40	55	216	69	327.5	1.0	3.4	WWMU13X512R-D*

øDc	Tool diameter tolerance	Hole diameter tolerance
ø20.0 - ø27.0	+ 0.2 / 0	+ 0.30 / 0
ø28.0 - ø54.0	+ 0.2 / 0	+ 0.35 / 0

SPARE PARTS

Designation	Clamping screw	Mono block type wrench
TDS200** - TDS235**	CSTB-2.2	IP-7D
TDS240** - TDS270**	CSTB-2.5	IP-8D
TDS280** - TDS320**	CSTB-3	IP-9D
TDS330** - TDS380**	CSTB-4	IP-15D
TDS390** - TDS540**	CSTB-5	IP-20D

INSERTS

WWMU-DJ

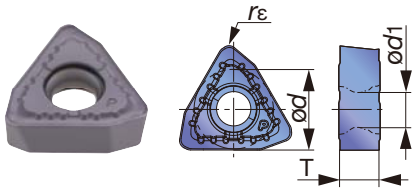

WWMU-DS

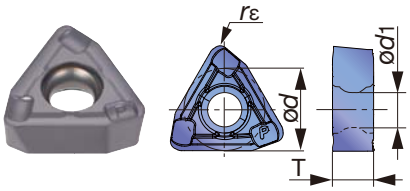

Designation	ød	T	ød1	rε	AH9030						AH6030					
					P	M	K	N	S	H	P	M	K	N	S	H
WWMU05X205R-DJ	5.8	2.4	2.5	0.5	●	○	●	○	○	●						
WWMU060306R-DJ	6.7	2.9	3	0.6	●	○	●	○	○	●						
WWMU08X408R-DJ	8.0	3.9	3.4	0.8	●	○	●	○	○	●						
WWMU09X510R-DJ	9.7	4.9	4.4	1.0	●	○	●	○	○	●						
WWMU11X512R-DJ	11.3	5.7	5.5	1.2	●	○	●	○	○	●						
WWMU13X512R-DJ	13.0	5.7	5.5	1.2	●	○	●	○	○	●						
WWMU05X205R-DS	5.8	2.4	2.5	0.5							○	●	○	○	●	○
WWMU060306R-DS	6.7	2.9	3	0.6							○	●	○	○	●	○
WWMU08X408R-DS	5.8	2.4	2.5	0.5							○	●	○	○	●	○
WWMU09X510R-DS	9.7	4.9	4.4	1.0							○	●	○	○	●	○
WWMU11X512R-DS	11.3	5.7	5.5	1.2							○	●	○	○	●	○
WWMU13X512R-DS	13.0	5.7	5.5	1.2							○	●	○	○	●	○

● First choice

Note: See page 9 for more information about grades.

MEMO

STANDARD CUTTING CONDITIONS

ISO	Workpiece materials	Selection criteria	Chip-breaker	Grade	Cutting speed *Vc* (m/min)
P	Low carbon steels (C < 0.3) SS400 / St42-1, SM490 / St52-3, S25C / C25, etc.	First choice	DS	AH6030	160 - 250
		Priority on wear resistance	DJ	AH9030	160 - 320
	Carbon steels (C > 0.3) S45C, S55C etc. (C45, C55, etc.)	First choice	DJ	AH9030	80 - 250
		Priority on impact resistance	DS	AH6030	80 - 250
	Low alloy steels SCM415, etc.	First choice	DS	AH6030	160 - 250
		Priority on wear resistance	DJ	AH9030	160 - 250
	Alloy steels SCM440 / 42CrMo4, SCr420 / 20Cr4, etc.	First choice	DJ	AH9030	80 - 200
		Priority on impact resistance	DS	AH6030	80 - 200
M	Stainless steels (Austenitic) SUS304 / X5CrNi18-9, SUS316 / X5CrNiMo17-12-2, etc.	First choice	DS	AH6030	100 - 200
		-	DJ	AH9030	100 - 200
	Stainless steels (Martensitic and ferritic) SUS430 / X6Cr17, SUS416 / X20Cr13, etc.	First choice	DS	AH6030	100 - 200
		-	DJ	AH9030	100 - 200
	Stainless steels (Precipitation hardening) SUS630 / X5CrNiCuNb16-4, etc.	First choice	DS	AH6030	80 - 120
		-	DJ	AH9030	80 - 120
K	Grey cast irons FC250 / GG25, etc.	First choice	DJ	AH9030	80 - 250
		Priority on impact resistance	DS	AH6030	80 - 200
	Ductile cast irons FCD700 / GGG70, etc.	First choice	DJ	AH9030	80 - 200
		Priority on impact resistance	DS	AH6030	80 - 150
N	Aluminium alloy	First choice	DS	AH6030	200 - 400
		-	DJ	AH9030	200 - 400
S	High temperature alloy Inconel718, etc	First choice	DS	AH6030	20 - 60
		-	DJ	AH9030	20 - 60
	Titanium Alooy Ti-6Al-4V, etc.	First choice	DS	AH6030	40 - 120
		-	DJ	AH9030	40 - 120
H	Hardened steel Over 40HRC	First choice	DJ	AH9030	50 - 100
		Priority on impact resistance	DS	AH6030	40 - 80

Note: See page 9 for more information about grades.
Drill body of L/D = 4 is not recommended for stainless steel or superalloys drilling

Feed: *f* (mm/rev)					
L/D = 2, 3			L/D = 4		
ø*Dc* (mm)			ø*Dc* (mm)		
ø20 - ø27.5	ø28 - ø38	ø39 - ø54	ø20 - ø27	ø28 - ø38	ø39 - ø54
0.04 - 0.10	0.04 - 0.10	0.04 - 0.10	0.04- 0.10	0.04 - 0.10	0.04 - 0.10
0.04 - 0.10	0.04 - 0.10	0.04 - 0.10	0.04 - 0.10	0.04 - 0.10	0.04 - 0.10
0.06 - 0.15	0.06 - 0.16	0.08 - 0.18	0.06 - 0.15	0.06 - 0.15	0.08 - 0.17
0.04 - 0.12	0.04 - 0.13	0.04 - 0.15	0.04 - 0.12	0.04 - 0.13	0.04 - 0.15
0.04 - 0.12	0.04 - 0.12	0.04 - 0.12	0.04 - 0.12	0.04 - 0.12	0.04 - 0.12
0.06 - 0.12	0.06 - 0.14	0.06 - 0.14	0.06 - 0.12	0.06 - 0.14	0.06 - 0.14
0.06 - 0.15	0.06 - 0.16	0.08 - 0.18	0.06 - 0.15	0.06 - 0.15	0.08 - 0.17
0.04 - 0.12	0.04 - 0.13	0.04 - 0.15	0.04 - 0.12	0.04 - 0.13	0.04 - 0.15
0.04 - 0.10	0.04 - 0.12	0.04 - 0.12	-	-	-
0.04 - 0.10	0.04 - 0.12	0.04 - 0.12	-	-	-
0.04 - 0.10	0.04 - 0.12	0.04 - 0.12	-	-	-
0.04 - 0.10	0.04 - 0.12	0.04 - 0.12	-	-	-
0.04 - 0.10	0.04 - 0.10	0.04 - 0.10	-	-	-
0.04 - 0.10	0.04 - 0.10	0.04 - 0.10	-	-	-
0.06 - 0.15	0.06 - 0.18	0.08 - 0.20	0.06 - 0.15	0.06 - 0.16	0.08 - 0.18
0.06 - 0.13	0.06 - 0.16	0.08 - 0.18	0.06 - 0.13	0.06 - 0.16	0.08 - 0.18
0.06 - 0.15	0.06 - 0.18	0.08 - 0.20	0.06 - 0.15	0.06 - 0.16	0.08 - 0.18
0.06 - 0.13	0.06 - 0.16	0.08 - 0.18	0.06 - 0.13	0.06 - 0.16	0.08 - 0.18
0.10 - 0.18	0.10 - 0.20	0.10 - 0.25	0.10 - 0.18	0.10 - 0.20	0.10 - 0.20
0.10 - 0.18	0.10 - 0.20	0.10 - 0.25	0.10 - 0.18	0.10 - 0.20	0.10 - 0.20
0.04 - 0.08	0.04 - 0.08	0.04 - 0.10	-	-	-
0.04 - 0.08	0.04 - 0.08	0.04 - 0.10	-	-	-
0.06 - 0.10	0.06 - 0.12	0.06 - 0.14	-	-	-
0.06 - 0.10	0.06 - 0.12	0.06 - 0.14	-	-	-
0.04 - 0.08	0.04 - 0.08	0.04 - 0.10	0.04 - 0.08	0.04 - 0.08	0.04 - 0.08
0.04 - 0.08	0.04 - 0.08	0.04 - 0.10	0.04 - 0.08	0.04 - 0.08	0.04 - 0.08

DEEP TRI DRILL
TUNGALOY

Deep hole drill that improves productivity in folds in gundrilling application

DeepTri-Drill, the easy-to-handle indexable gundrill series, delivers outstanding performance and stability in machining.

- **Optimized guide pads and insert positioning:**

- **Good circularity, straightness, and surface quality.**

- **Smooth chip evacuation:**

- Chip splitters produce small chips and deliver smooth evacuation, reducing cutting force and allowing **increased feed rate** compared to brazed gundrills.

- **Economical indexable insert with 3 cutting edges:**

- No regrinding required

- H-class insert controls drilling diameter and the relation between the guide pad and insert, **ensuring hole accuracy of IT10 class.**

- Drilling diameters ranges from øDc 16 to 28 mm (0.63" to 1.102").

- Can be used in lathes, machining centers, and gundrill machines.

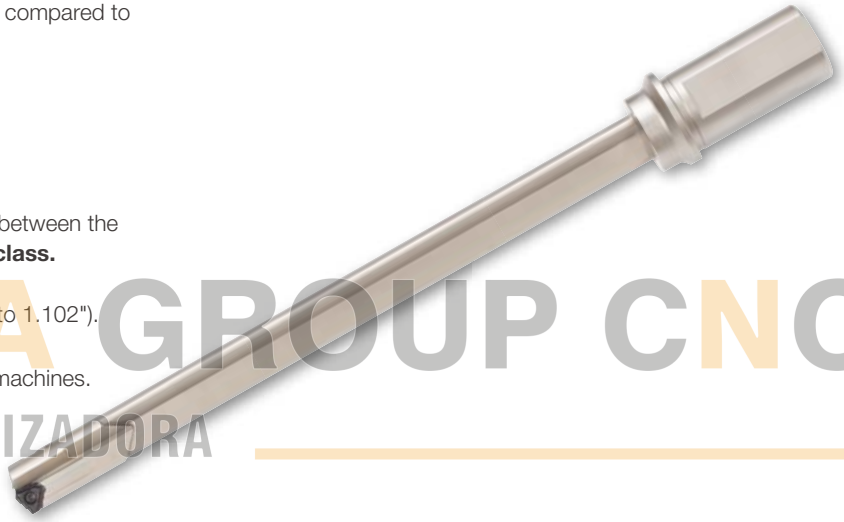

TUNGFORCE DRILL
ACCELERATED MACHINING

Line up:

Inserts:
TOHT… in 5 sizes cover øDc 16 to 28 mm (0.63" to 1.102")
AH725 grade for long tool life and PremiumGTec coating provide strong resistance to chip welding for stable and reliable deep hole drilling

Guide pad:
GP06-..: Equipped with 2 usable edges and available in 2 grades to suit different materials

Drill bodies for lathes, machining centers, and gundrill machines:
MCTR… for machining centers: Stocked in L/D=10, 15, and 25 for drilling depths 170 to 700 mm (6.69" to 27.56") depending on the diameter
TRLG… for gundrill machines: Offered up to the length of 1500 mm (59"), which is as long as 90 times the diameter of drilling depth
Also available in a variety of drill holding drivers for different types of gundrill machines

TOHT-NDJ (080...) - (120...)

DRILL L/D = 10

DeepTri-Drill MCTR L/D = 10

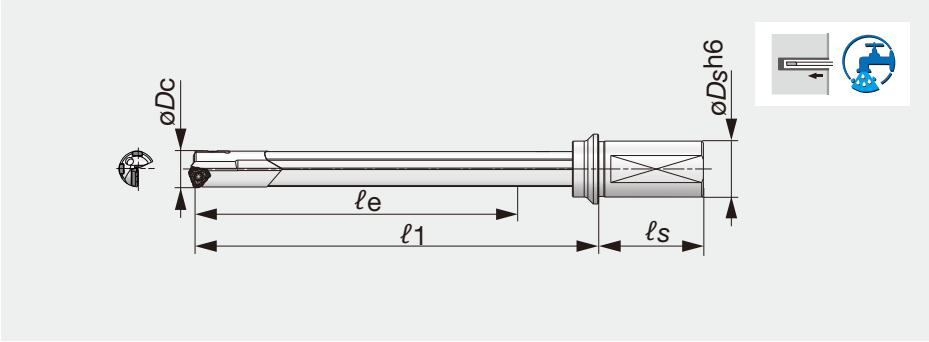

Designation	øDc	øDs	ℓe	ℓs	ℓ1	Insert	Guide pad
MCTR16.00XM25-10	16.0	25	170	56	209	TOHT08...	GP06-075
MCTR16.50XM25-10	16.5	25	170	56	209	TOHT08...	GP06-075
MCTR17.00XM25-10	17.0	25	180	56	220	TOHT08...	GP06-075
MCTR18.00XM25-10	18.0	25	190	56	232	TOHT08...	GP06-075
MCTR19.00XM25-10	19.0	25	200	56	243	TOHT09...	GP06-085
MCTR20.00XM32-10	20.0	32	210	60	255	TOHT09...	GP06-085
MCTR21.00XM32-10	21.0	32	220	60	266	TOHT10...	GP06-085
MCTR22.00XM32-10	22.0	32	230	60	278	TOHT11...	GP06-100
MCTR23.00XM32-10	23.0	32	240	60	289	TOHT11...	GP06-100
MCTR24.00XM32-10	24.0	32	250	60	301	TOHT11...	GP06-100
MCTR25.00XM32-10	25.0	32	260	60	312	TOHT11...	GP06-100
MCTR26.00XM40-10	26.0	40	270	70	324	TOHT12...	GP06
MCTR27.00XM40-10	27.0	40	280	70	335	TOHT12...	GP06
MCTR28.00XM40-10	28.0	40	280	70	337	TOHT12...	GP06

øDc	Tool diameter tolerance	Hole diameter tolerance
ø16 - ø28	0 / - 0.07	+ 0.05 / - 0.10

SPARE PARTS

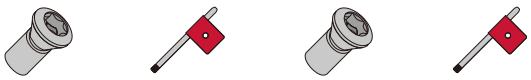

Designation	Insert		Guide pad	
	Screw	Wrench	Screw	Wrench
MCTR16** - MCTR20**	CSTB2.5S	T-8F	CSTB2.2S	T-7F
MCTR21**	CSTB3S	T-9F	CSTB2.2S	T-7F
MCTR22** - MCTR25**	CSTB3.5H	T-15F	CSTB2.2S	T-7F
MCTR26** - MCTR28**	CSTB4S	T-15F	CSTB2.2S	T-7F

DRILL L/D = 15

DeepTri-Drill MCTR L/D = 15

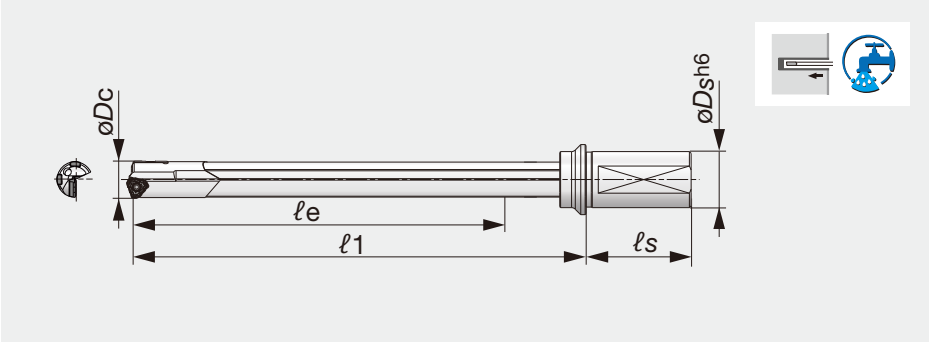

Designation	øDc	øDs	ℓe	ℓs	ℓ1	Insert	Guide pad
MCTR16.00XM25-15	16.0	25	255	56	294	TOHT08...	GP06-075
MCTR16.50XM25-15	16.5	25	255	56	294	TOHT08...	GP06-075
MCTR17.00XM25-15	17.0	25	270	56	310	TOHT08...	GP06-075
MCTR17.50XM25-15	17.5	25	270	56	310	TOHT08...	GP06-075
MCTR18.00XM25-15	18.0	25	285	56	327	TOHT08...	GP06-075
MCTR18.50XM25-15	18.5	25	285	56	327	TOHT09...	GP06-085
MCTR19.00XM25-15	19.0	25	300	56	343	TOHT09...	GP06-085
MCTR19.50XM25-15	19.5	25	300	56	343	TOHT09...	GP06-085
MCTR20.00XM32-15	20.0	32	315	60	360	TOHT09...	GP06-085
MCTR21.00XM32-15	21.0	32	330	60	376	TOHT10...	GP06-085
MCTR22.00XM32-15	22.0	32	345	60	393	TOHT11...	GP06-100
MCTR23.00XM32-15	23.0	32	360	60	409	TOHT11...	GP06-100
MCTR24.00XM32-15	24.0	32	375	60	426	TOHT11...	GP06-100
MCTR25.00XM32-15	25.0	32	390	60	442	TOHT11...	GP06-100
MCTR26.00XM40-15	26.0	40	405	70	459	TOHT12...	GP06
MCTR27.00XM40-15	27.0	40	420	70	475	TOHT12...	GP06
MCTR28.00XM40-15	28.0	40	420	70	477	TOHT12...	GP06

øDc	Tool diameter tolerance	Hole diameter tolerance
ø16 - ø28	0 / - 0.07	+ 0.05 / - 0.10

SPARE PARTS

Designation	Insert		Guide pad	
	Screw	Wrench	Screw	Wrench
MCTR16** - MCTR20**	CSTB2.5S	T-8F	CSTB2.2S	T-7F
MCTR21**	CSTB3S	T-9F	CSTB2.2S	T-7F
MCTR22** - MCTR25**	CSTB3.5H	T-15F	CSTB2.2S	T-7F
MCTR26** - MCTR28**	CSTB4S	T-15F	CSTB2.2S	T-7F

DRILL L/D = 25

DeepTri-Drill MCTR L/D = 25

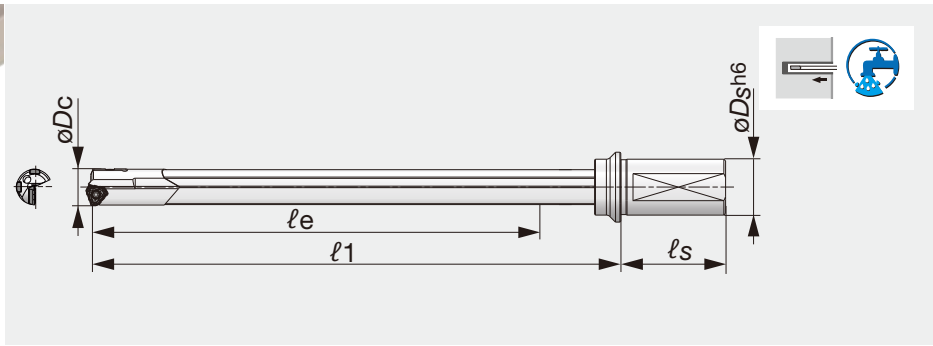

Designation	øDc	øDs	ℓe	ℓs	ℓ1	Insert	Guide pad
MCTR16.00XM25-25	16.0	25	425	56	464	TOHT08...	GP06-075
MCTR16.50XM25-25	16.5	25	425	56	464	TOHT08...	GP06-075
MCTR17.00XM25-25	17.0	25	450	56	490	TOHT08...	GP06-075
MCTR17.50XM25-25	17.5	25	450	56	490	TOHT08...	GP06-075
MCTR18.00XM25-25	18.0	25	475	56	517	TOHT08...	GP06-075
MCTR18.50XM25-25	18.5	25	475	56	517	TOHT09...	GP06-085
MCTR19.00XM25-25	19.0	25	500	56	543	TOHT09...	GP06-085
MCTR19.50XM25-25	19.5	25	500	56	543	TOHT09...	GP06-085
MCTR20.00XM32-25	20.0	32	525	60	570	TOHT09...	GP06-085
MCTR21.00XM32-25	21.0	32	550	60	596	TOHT10...	GP06-085
MCTR22.00XM32-25	22.0	32	575	60	623	TOHT11...	GP06-100
MCTR23.00XM32-25	23.0	32	600	60	649	TOHT11...	GP06-100
MCTR24.00XM32-25	24.0	32	625	60	676	TOHT11...	GP06-100
MCTR25.00XM32-25	25.0	32	650	60	702	TOHT11...	GP06-100
MCTR26.00XM40-25	26.0	40	675	70	729	TOHT12...	GP06
MCTR27.00XM40-25	27.0	40	700	70	755	TOHT12...	GP06
MCTR28.00XM40-25	28.0	40	700	70	757	TOHT12...	GP06

øDc	Tool diameter tolerance	Hole diameter tolerance
ø16 - ø28	0 / - 0.07	+ 0.05 / - 0.10

SPARE PARTS

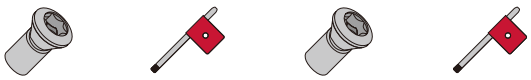

Designation	Insert		Guide pad	
	Screw	Wrench	Screw	Wrench
MCTR16** - MCTR20**	CSTB2.5S	T-8F	CSTB2.2S	T-7F
MCTR21**	CSTB3S	T-9F	CSTB2.2S	T-7F
MCTR22** - MCTR25**	CSTB3.5H	T-15F	CSTB2.2S	T-7F
MCTR26** - MCTR28**	CSTB4S	T-15F	CSTB2.2S	T-7F

DESIGNATION FOR TAILOR MADE TOOLS

When a specially designed tool is needed, use the below guide line to make the designation (Cat. No).

MCTR	16.50	XM	25	-	22
1	2		3		4

1 Series	
MCTR	DeepTriDrill (For machining centers and lathes)

2 Drill dia. *øDc* (mm)	
16.50	ø16.50

3 Driver dia. *øDs* (mm)	
25	ø25

4 L/D ratio

AVAILABLE RANGE OF TAILOR MADE DRILL BODIES

øDc	*øDs*	ℓ_e	ℓ_s	ℓ_1
16.00 - 16.79	25	136 - 425	56	175 - 464
16.80 - 17.69	25	144 - 450	56	184 - 490
17.70 - 18.69	25	152 - 475	56	194 - 517
18.70 - 19.69	25	160 - 500	56	203 - 543
19.70 - 20.69	32	168 - 525	60	213 - 570
20.70 - 21.69	32	176 - 550	60	222 - 596
21.70 - 22.69	32	184 - 575	60	232 - 623
22.70 - 23.69	32	192 - 600	60	241 - 649
23.70 - 24.69	32	200 - 625	60	251 - 676
24.70 - 25.69	32	208 - 650	60	260 - 702
25.70 - 26.69	40	216 - 675	70	270 - 719
26.70 - 27.69	40	224 - 700	70	279 - 745
27.70 - 28.00	40	224 - 700	70	281 - 747

DRILL TRLG

DeepTri-Drill TRLG

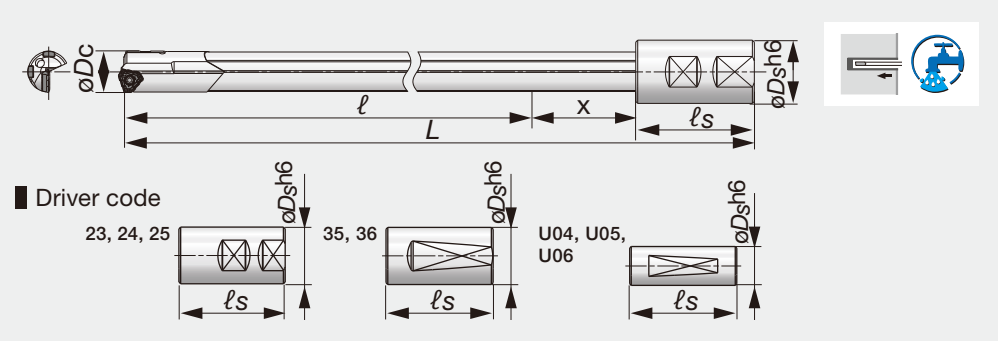

Designation	øDc	L	ℓ	øDs	ℓs	x	Driver code	Insert	Guide pad
TRLG16.00X800-23	16.00	800	720	25	56	24	23	TOHT08...	GP06-075
TRLG16.00X800-U04	16.00	800	706	25.4	70	24	U04	TOHT08...	GP06-075
TRLG16.00X800-35	16.00	800	720	25	56	24	35	TOHT08...	GP06-075
TRLG16.00X1000-23	16.00	1000	920	25	56	24	23	TOHT08...	GP06-075
TRLG16.00X1000-U04	16.00	1000	906	25.4	70	24	U04	TOHT08...	GP06-075
TRLG16.00X1000-35	16.00	1000	920	25	56	24	35	TOHT08...	GP06-075
TRLG16.00X1500-U04	16.00	1500	1406	25.4	70	24	U04	TOHT08...	GP06-075
TRLG16.00X1500-23	16.00	1500	1420	25	56	24	23	TOHT08...	GP06-075
TRLG16.00X1500-35	16.00	1500	1420	25	56	24	35	TOHT08...	GP06-075
TRLG17.00X800-23	17.00	800	719	25	56	25	23	TOHT08...	GP06-075
TRLG17.00X800-U04	17.00	800	705	25.4	70	25	U04	TOHT08...	GP06-075
TRLG17.00X1000-23	17.00	1000	919	25	56	25	23	TOHT08...	GP06-075
TRLG17.00X1000-U04	17.00	1000	905	25.4	70	25	U04	TOHT08...	GP06-075
TRLG17.00X1000-35	17.00	1000	919	25	56	25	35	TOHT08...	GP06-075
TRLG17.00X1500-23	17.00	1500	1419	25	56	25	23	TOHT08...	GP06-075
TRLG17.00X1500-U04	17.00	1500	1405	25.4	70	25	U04	TOHT08...	GP06-075
TRLG17.00X1500-35	17.00	1500	1419	25	56	25	35	TOHT08...	GP06-075
TRLG18.00X800-23	18.00	800	717	25	56	27	23	TOHT08...	GP06-075
TRLG18.00X800-U04	18.00	800	703	25.4	70	27	U04	TOHT08...	GP06-075
TRLG18.00X800-35	18.00	800	717	25	56	27	35	TOHT08...	GP06-075
TRLG18.00X1000-23	18.00	1000	917	25	56	27	23	TOHT08...	GP06-075
TRLG18.00X1000-U04	18.00	1000	903	25.4	70	27	U04	TOHT08...	GP06-075
TRLG18.00X1000-35	18.00	1000	917	25	56	27	35	TOHT08...	GP06-075
TRLG18.00X1500-U04	18.00	1500	1403	25.4	70	27	U04	TOHT08...	GP06-075
TRLG18.00X1500-23	18.00	1500	1417	25	56	27	23	TOHT08...	GP06-075
TRLG18.00X1500-35	18.00	1500	1417	25	56	27	35	TOHT08...	GP06-075
TRLG19.00X800-23	19.00	800	716	25	56	28	23	TOHT09...	GP06-085
TRLG19.00X800-U04	19.00	800	702	25.4	70	28	U04	TOHT09...	GP06-085
TRLG19.00X800-35	19.00	800	716	25	56	28	35	TOHT09...	GP06-085
TRLG19.00X1000-23	19.00	1000	916	25	56	28	23	TOHT09...	GP06-085
TRLG19.00X1000-U04	19.00	1000	902	25.4	70	28	U04	TOHT09...	GP06-085
TRLG19.00X1000-35	19.00	1000	916	25	56	28	35	TOHT09...	GP06-085
TRLG19.00X1500-U04	19.00	1500	1402	25.4	70	28	U04	TOHT09...	GP06-085
TRLG19.00X1500-23	19.00	1500	1416	25	56	28	23	TOHT09...	GP06-085
TRLG19.00X1500-35	19.00	1500	1416	25	56	28	35	TOHT09...	GP06-085

Designation	øDc	L	ℓ	øDs	ℓs	x	Driver code	Insert	Guide pad
TRLG20.00X800-24	20.00	800	710	32	60	30	24	TOHT09...	GP06-085
TRLG20.00X800-U05	20.00	800	700	31.75	70	30	U05	TOHT09...	GP06-085
TRLG20.00X800-36	20.00	800	710	32	60	30	36	TOHT09...	GP06-085
TRLG20.00X1000-24	20.00	1000	910	32	60	30	24	TOHT09...	GP06-085
TRLG20.00X1000-U05	20.00	1000	900	31.75	70	30	U05	TOHT09...	GP06-085
TRLG20.00X1000-36	20.00	1000	910	32	60	30	36	TOHT09...	GP06-085
TRLG20.00X1500-24	20.00	1500	1410	32	60	30	24	TOHT09...	GP06-085
TRLG20.00X1500-U05	20.00	1500	1400	31.75	70	30	U05	TOHT09...	GP06-085
TRLG20.00X1500-36	20.00	1500	1410	32	60	30	36	TOHT09...	GP06-085
TRLG21.00X1000-24	21.00	1000	909	32	60	31	24	TOHT10...	GP06-085
TRLG21.00X1000-U05	21.00	1000	899	31.75	70	31	U05	TOHT10...	GP06-085
TRLG21.00X1000-36	21.00	1000	909	32	60	31	36	TOHT10...	GP06-085
TRLG21.00X1500-24	21.00	1500	1409	32	60	31	24	TOHT10...	GP06-085
TRLG21.00X1500-U05	21.00	1500	1399	31.75	70	31	U05	TOHT10...	GP06-085
TRLG21.00X1500-36	21.00	1500	1409	32	60	31	36	TOHT10...	GP06-085
TRLG22.00X1000-24	22.00	1000	907	32	60	33	24	TOHT11...	GP06-100
TRLG22.00X1000-U05	22.00	1000	897	31.75	70	33	U05	TOHT11...	GP06-100
TRLG22.00X1000-36	22.00	1000	907	32	60	33	36	TOHT11...	GP06-100
TRLG22.00X1500-24	22.00	1500	1407	32	60	33	24	TOHT11...	GP06-100
TRLG22.00X1500-U05	22.00	1500	1397	31.75	70	33	U05	TOHT11...	GP06-100
TRLG22.00X1500-36	22.00	1500	1407	32	60	33	36	TOHT11...	GP06-100
TRLG23.00X1000-24	23.00	1000	906	32	60	34	24	TOHT11...	GP06-100
TRLG23.00X1000-U05	23.00	1000	896	31.75	70	34	U05	TOHT11...	GP06-100
TRLG23.00X1000-36	23.00	1000	906	32	60	34	36	TOHT11...	GP06-100
TRLG23.00X1500-24	23.00	1500	1406	32	60	34	24	TOHT11...	GP06-100
TRLG23.00X1500-U05	23.00	1500	1396	31.75	70	34	U05	TOHT11...	GP06-100
TRLG23.00X1500-36	23.00	1500	1406	32	60	34	36	TOHT11...	GP06-100
TRLG24.00X1000-24	24.00	1000	904	32	60	36	24	TOHT11...	GP06-100
TRLG24.00X1000-U05	24.00	1000	894	31.75	70	36	U05	TOHT11...	GP06-100
TRLG24.00X1000-36	24.00	1000	904	32	60	36	36	TOHT11...	GP06-100
TRLG24.00X1500-24	24.00	1500	1404	32	60	36	24	TOHT11...	GP06-100
TRLG24.00X1500-U05	24.00	1500	1394	31.75	70	36	U05	TOHT11...	GP06-100
TRLG24.00X1500-36	24.00	1500	1404	32	60	36	36	TOHT11...	GP06-100
TRLG25.00X1000-24	25.00	1000	903	32	60	37	24	TOHT11...	GP06-100
TRLG25.00X1000-U05	25.00	1000	893	31.75	70	37	U05	TOHT11...	GP06-100
TRLG25.00X1000-36	25.00	1000	903	32	60	37	36	TOHT11...	GP06-100
TRLG25.00X1500-24	25.00	1500	1403	32	60	37	24	TOHT11...	GP06-100
TRLG25.00X1500-U05	25.00	1500	1393	31.75	70	37	U05	TOHT11...	GP06-100
TRLG25.00X1500-36	25.00	1500	1403	32	60	37	36	TOHT11...	GP06-100
TRLG26.00X1000-25	26.00	1000	891	40	70	39	25	TOHT12...	GP06
TRLG26.00X1000-U06	26.00	1000	891	38.1	70	39	U06	TOHT12...	GP06
TRLG26.00X1500-25	26.00	1500	1391	40	70	39	25	TOHT12...	GP06
TRLG26.00X1500-U06	26.00	1500	1391	38.1	70	39	U06	TOHT12...	GP06
TRLG27.00X1000-25	27.00	1000	890	40	70	40	25	TOHT12...	GP06
TRLG27.00X1000-U06	27.00	1000	890	38.1	70	40	U06	TOHT12...	GP06
TRLG27.00X1500-25	27.00	1500	1390	40	70	40	25	TOHT12...	GP06
TRLG27.00X1500-U06	27.00	1500	1390	38.1	70	40	U06	TOHT12...	GP06
TRLG28.00X1000-25	28.00	1000	888	40	70	42	25	TOHT12...	GP06
TRLG28.00X1000-U06	28.00	1000	888	38.1	70	42	U06	TOHT12...	GP06
TRLG28.00X1500-25	28.00	1500	1388	40	70	42	25	TOHT12...	GP06
TRLG28.00X1500-U06	28.00	1500	1388	38.1	70	42	U06	TOHT12...	GP06

øDc	Tool diameter tolerance	Hole diameter tolerance
ø16 - ø28	0 / - 0.07	+ 0.05 / - 0.10

SPARE PARTS

Designation	Insert		Guide pad	
	Screw	Wrench	Screw	Wrench
TRLG16** - TRLG20**	CSTB2.5S	T-8F	CSTB2.2S	T-7F
TRLG21**	CSTB3S	T-9F	CSTB2.2S	T-7F
TRLG22** - TRLG25**	CSTB3.5H	T-15F	CSTB2.2S	T-7F
TRLG26** - TRLG28**	CSTB4S	T-15F	CSTB2.2S	T-7F

DESIGNATION FOR TAILOR MADE TOOLS

When a specially designed tool is needed, use the below guide line to make the designation (Cat. No).

TRLG	16.50	X	900	-	23
❶	❷		❸		❹

❶ Series	
TRLG	DeepTriDrill (For gun drill machine)

❷ Drill dia. *øDc* (mm)	
16.50	ø16.50

❸ Overall length: *L* (mm)	
900	900

❹ Driver code	
23	23

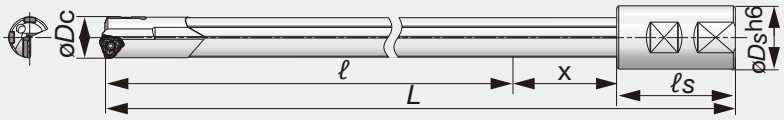

AVAILABLE RANGE OF TAILOR MADE DRILL BODIES

øDc	*L*	x
16.00 - 16.79	400 - 2400	24
16.80 - 17.69	400 - 2400	25
17.70 - 18.69	400 - 2400	27
18.70 - 19.69	400 - 2400	28
19.70 - 20.69	400 - 2400	30
20.70 - 21.69	400 - 2400	31
21.70 - 22.69	400 - 2400	33

øDc	*L*	x
22.70 - 23.69	400 - 2400	34
23.70 - 24.69	400 - 2400	36
24.70 - 25.69	400 - 2400	37
25.70 - 26.69	400 - 2400	39
26.70 - 27.69	400 - 2400	40
27.70 - 28.00	400 - 2400	42

Please provide the driver shape depending on your request

INSERTS

TOHT-NDJ (080...)

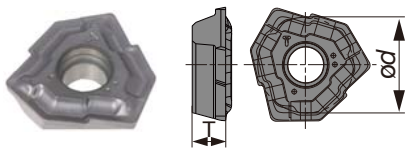

TOHT-NDJ (090... - 120...)

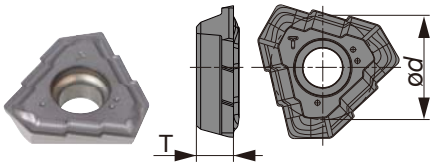

NDJ chipbreaker

- Low cutting force
- For general purpose

Designation	øDc	Grade AH725	ød	T
TOHT080305R-NDJ	16.00 - 18.00	✓	8.55	2.8
TOHT090305R-NDJ	18.01 - 20.00	✓	8.32	3.0
TOHT100305R-NDJ	20.01 - 21.99	✓	9.23	3.3
TOHT110405R-NDJ	22.00 - 25.00	✓	10.40	3.8
TOHT120405R-NDJ	25.01 - 28.00	✓	11.59	4.3

✓ : Stocked items

Package quantity = 10 pcs.

Note: See page 9 for more information about grades.

GUIDE PAD

GP06

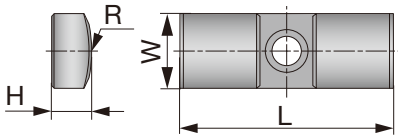

Designation	øDc	Grade F1122	Grade F2122	W	L	H	R
GP06-075	16.00 - 18.00	✓	✓	6.0	20.0	3.0	7.5
GP06-085	18.01 - 21.00	✓	✓	6.0	20.0	3.0	8.5
GP06-100	21.01 - 25.00	✓	✓	6.0	20.0	3.0	10.0
GP06	25.01 - 28.00	✓	✓	6.0	20.0	3.0	12.0

✓ : Stocked items

Package quantity = 5 pcs.

Replacing guide pads

Guide pads are subject to wear, like inserts

- Each guide pad has 2 corners.
- When the width of wear on the 1st corner reaches 70% of the width of guide pad, reverse the guide pad and use the 2nd corner.
- Replace the guide pad with a new one when the 2nd corner shows the same wear as on the 1st corner.

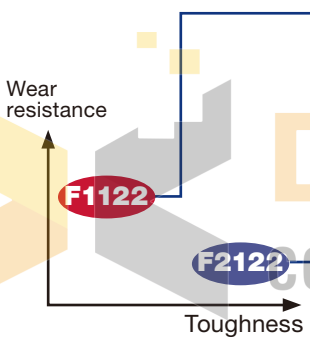

Priority for wear
- High wear resistance

First recommendation
- Suitable for various workpiece materials
- Long tool life due to unique substrate and coating
- Applicable for both water-soluble and oil-based coolant

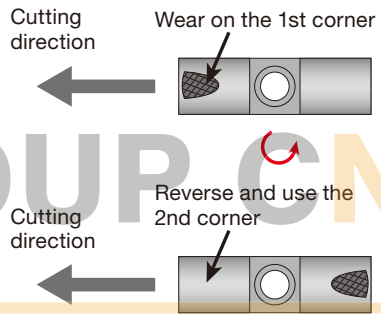

STANDARD CUTTING CONDITIONS

ISO	Workpiece materials	Cutting speed *Vc* (m/min)	Feed *f* (mm/rev)
P	Low carbon steel (C < 0.3) SS400 / St42-1, SM490 / St52-3, S25C / C25, etc.	80 - 140	0.05 - 0.10
	Carbon steel (C > 0.3) S45C / C45, S55C / C55, etc.	80 - 140	0.05 - 0.20
	Low alloy steel (C < 0.3) SCM415, etc.	80 - 140	0.05 - 0.20
	Alloy steel (C > 0.3) SCM440 / 42CrMo4, SCr420 / 20Cr4, etc.	80 - 120	0.05 - 0.20
M	Stainless steel (Austenitic) SUS304 / X5CrNi18-9, SUS316 / X5CrNiMo17-12-3, etc.	60 - 100	0.05 - 0.10
	Stainless steel (Martensitic, Ferritic) SUS430 / X6Cr17, SUS416 / X12CrS13, etc.	60 - 100	0.05 - 0.10
	Stainless steel (Precipitation hardening) SUS630 / X5CrNiCuNb16-4, etc.	60 - 100	0.05 - 0.10
K	Grey cast iron FC250 / 250, etc.	80 - 140	0.05 - 0.30
	Ductile cast iron FCD700, etc.	80 - 140	0.05 - 0.30
N	Aluminium alloys	100 - 200	0.05 - 0.20
S	Heat-resistant alloys Inconel 718, etc.	20 - 50	0.04 - 0.10
	Titanium alloys Ti-6Al-4V, etc.	30 - 60	0.05 - 0.15
H	Hardened steel ≥ 40HRC	50 - 100	0.04 - 0.10

SHAPES OF THE HOLE BOTTOM

øDc	Insert	Maximum difference Hmax
16.00 - 18.00	TOHT08	2.166
18.01 - 20.00	TOHT09	2.965
20.01 - 21.99	TOHT10	3.158
22.00 - 25.00	TOHT11	3.383
25.01 - 28.00	TOHT12	3.63

TOHT08...

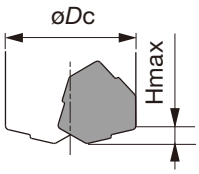

TOHT09... - TOHT12...

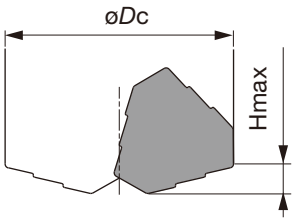

REQUIRED SPINDLE POWER AND COOLANT PRESSURE

Net power

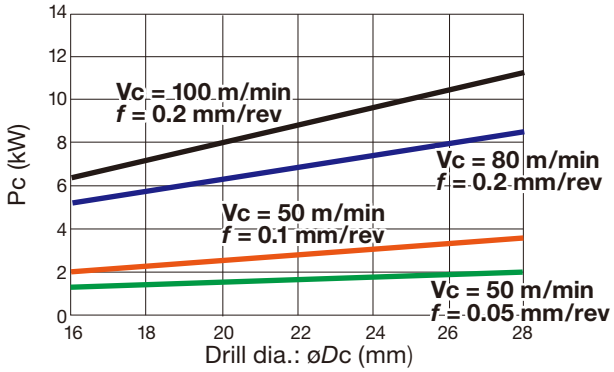

Torque

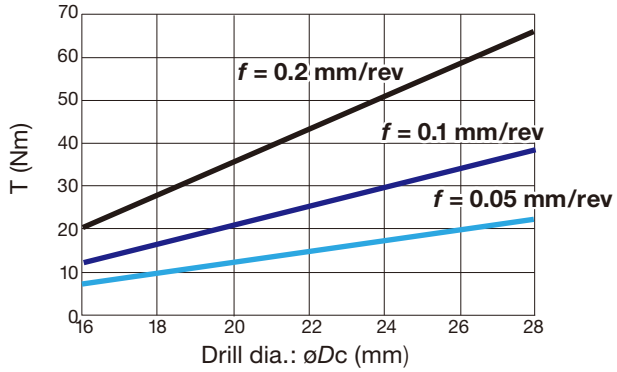

Coolant pressure (Recommended value)

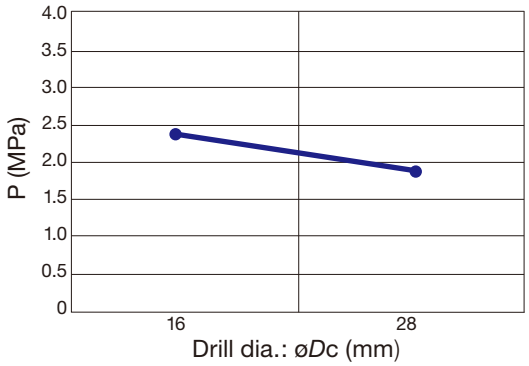

Coolant flow rate (Recommended value)

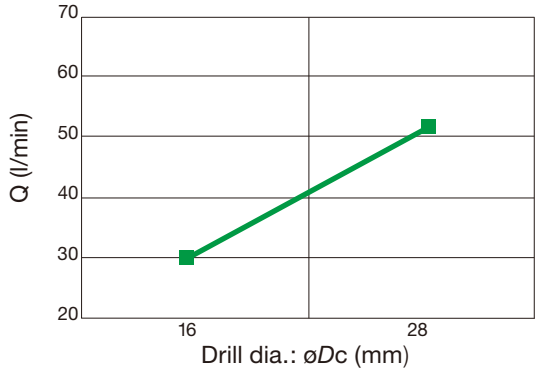

DRILLING PROCEDURE ON MACHINING CENTERS AND LATHES

Proceed as instructed below in order to maximize the tool performance safely.

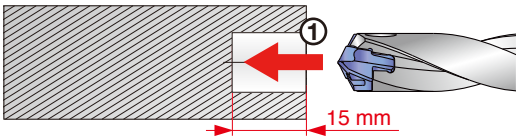

① Drill the guide hole

Hole diameter tolerance: +0.01 - +0.1 mm
Hole depth: H = 15 mm

Please use DrillMeister or TDX + EZ sleeve to make a guide hole

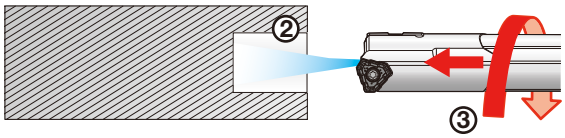

② Start coolant

③ Slowly insert DeepTriDrill into the guide hole

No. of revolution: n = 50 - 100 min^{-1}
Feed speed: Vf = 100 - 300 mm/min

Caution: Do not rotate the drill at machining speed outside the hole

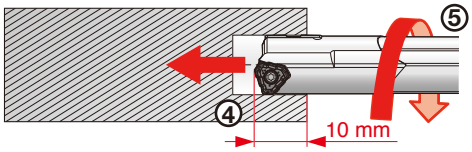

④ Stop the drill at 10 mm depth

⑤ Start rotating at machining speed

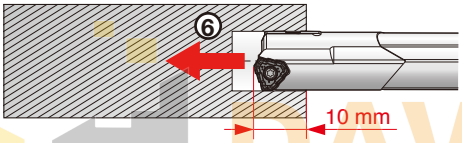

⑥ Start feed

At the entrance (H = 10 - 15 mm)
→ Feed: f = 80% of programmed feed

Hole depth: H ≥ 15 mm → Feed: f = 100%

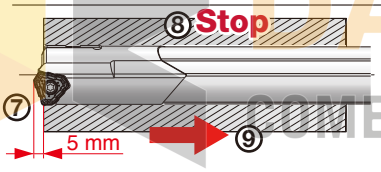

⑦ For through hole

Continue drilling until the drill head passes through the workpiece by 5 mm

⑧ Stop the rotation and coolant

⑨ Return the drill (Head back to the starting position)

MEMO

MEMO

Worldwide Network

Tungaloy Corporation Head Office
11-1 Yoshima Kogyodanchi
Iwaki 970-1144 Japan
Phone: +81-246-36-8501
Fax: +81-246-36-8542
www.tungaloy.co.jp

Iwaki Plant
Products: Cutting Tools

Nagoya Plant
Products: Cutting Tools

Kyushu Plant
Products: PCBN
PCD Tools
Deep Hole Drills

Nirasaki Plant
Products: Cutting Tools
Friction Materials (TungFric)
Wear Resistant Tools
Civil Engineering Tools

Yamato Plant
Products: Cutting Tools

Tungaloy America, Inc.
3726 N Ventura Drive
Arlington Heights
IL 60004, U.S.A.
Phone: +1-888-554-8394
Fax: +1-888-554-8392
www.tungaloyamerica.com

Tungaloy Canada
432 Elgin St. Unit 3, Brantford
Ontario N3S 7P7, Canada
Phone: +1-519-758-5779
Fax: +1-519-758-5791
www.tungaloy.co.jp/ca

Tungaloy de Mexico S.A.
C Los Arellano 113
Parque Industrial Siglo XXI
Aguascalientes, AGS
Mexico 20290
Phone: +52-449-929-5410
Fax: +52-449-929-5411
www.tungaloy.co.jp/mx

Tungaloy do Brasil Ltda.
Rua dos Sabias N.104
13280-000 Vinhedo
São Paulo, Brazil
Phone: +55-19-38262757
Fax: +55-19-38262757
www.tungaloy.com/br

Tungaloy Germany GmbH
An der Alten Ziegelei 1
D-40789 Monheim, Germany
Phone: +49-2173-90420-0
Fax: +49-2173-90420-19
www.tungaloy.de

Tungaloy France S.A.S.
ZA Courtaboeuf - Le Rio
1 rue de la Terre de feu
F-91952 Courtaboeuf Cedex, France
Phone: +33-1-6486-4300
Fax: +33-1-6907-7817
www.tungaloy.fr

Tungaloy Italia S.r.l.
Via E. Andolfato 10
I-20126 Milano, Italy
Phone: +39-02-252012-1
Fax: +39-02-252012-65
www.tungaloy.it

Tungaloy Czech s.r.o
Turanka 115
CZ-627 00 Brno, Czech Republic
Phone: +420-532 123 391
Fax: +420-532 123 392
www.tungaloy.cz

Tungaloy Ibérica S.L.
C/Miquel Servet, 43B, Nau 7
Pol. Ind. Bufalvent
ES-08243 Manresa (BCN), Spain
Phone: +34 93 113 1360
Fax: +34 93 876 2798
www.tungaloy.es

Tungaloy Scandinavia AB
S:t Lars Väg 42A
SE-22270 Lund, Sweden
Phone: +46-462119200
Fax: +46-462119207
www.tungaloy.se

Tungaloy Rus, LLC
36-D Harkovsky Lane
308009 Belgorod, Russia
Phone: +7 4722 24 00 07
Fax: +7 4722 24 00 08
www.tungaloy.co.jp/ru

Tungaloy East LLC
Stachek str., h.4, office 2, Ekaterinburg,
620017, RUSSIA
Phone: +7-343-389-13-22
Fax: +7-343-278-94-35
www.tungaloy.co.jp/rue

Tungaloy Polska Sp. z o.o.
ul. Genewska 24
03-963 Warszawa, Poland
Phone: +48-22-617-0890
Fax: +48-22-617-0890
www.tungaloy.co.jp/pl

Tungaloy U.K. Ltd
The Technology Centre
Wolverhampton Science Park
Glaisher Drive, Wolverhampton
West Midlands WV10 9RU, UK
Phone: +44 121 4000 231
Fax: +44 121 270 9694
www.tungaloy.co.jp/uk

Tungaloy Hungary Kft
Erzsébet királyné útja 125
H-1142 Budapest, Hungary
Phone: +36 1 781-6846
Fax: +36 1 781-6866
www.tungaloy.co.jp/hu

Tungaloy Turkey
Dudullu OSB 4. Cad No:4
34776 Ümraniye Istanbul, TURKEY
Phone: +90 216 540 04 67
Fax: +90 216 540 04 87
www.tungaloy.com.tr

Tungaloy Benelux b.v.
Tjalk 70
NL-2411 NZ Bodegraven Netherlands
Phone: +31 172 630 420
Fax: +31 172 630 429
www.tungaloy-benelux.com

Tungaloy Croatia
Josipa Kozarca 4
10432 Bregana, Croatia
Phone: +385 1 3326 604
Fax: +385 1 3327 683
www.tungaloy.hr

Tungaloy Cutting Tool (Shanghai) Co.,Ltd.
Rm No 401 No.88 Zhabei
Jiangchang No.3 Rd
Shanghai 200436, China
Phone: +86-21-3632-1880
Fax: +86-21-3621-1918
www.tungaloy.co.jp/tcts

Tungaloy Cutting Tool (Thailand) Co.,Ltd.
TCIF Tower 4th Fl.
1858/5-7 Bangna-Trad Road
km.5 Bangna, Bangna, Bangkok
10260
Thailand
Phone: +66-2-751-5711
Fax: +66-2-751-5715
www.tungaloy.co.th

Tungaloy Singapore (Pte.), Ltd.
62 Ubi Road 1
#06-11 Oxley BizHub 2
Singapore 408734
Phone: +65-6391-1833
Fax: +65-6299-4557
www.tungaloy.co.jp/tspl

Tungaloy Vietnam
Unit 18
4th Fl. Saigon Centre Building
65 Le Loi Blvd.
Dist 1, Ho Chi Minh City, Vietnam
Phone: +84-8-3827-0201
Fax: +84-8-3827-0203
www.tungaloy.co.jp/tspl

Tungaloy India Pvt. Ltd.
Indiabulls Finance Centre,
Unit # 902-A, 9th Floor,
Tower 1, Senapati Bapat Marg,
Elphinstone Road (West),
Mumbai -400013, India
Phone: +91-22-6124-8804
Fax: +91-22-6124-8899
www.tungaloy.co.jp/in

Tungaloy Korea Co., Ltd
#1312, Byucksan Digital Valley 5-cha
Beotkkot-ro 244, Geumcheon-gu
153-788 Seoul, Korea
Phone: +82-2-2621-6161
Fax: +82-2-6393-8952
www.tungaloy.co.jp/kr

Tungaloy Malaysia Sdn Bhd
50 K-2, Kelana Mall, Jalan
SS6/14, Kelana Jaya, 47301
Petaling Jaya, Selangor Darul Ehsan
Malaysia
Phone: +603-7805-3222
Fax: +603-7804-8563
www.tungaloy.co.jp/my

Tungaloy Australia Pty Ltd
PO Box 2232, Rowville
Victoria 3178, Australia
Phone: +61-3-9755-8147
Fax: +61-3-9755-6070
www.tungaloy.com.au

PT. Tungaloy Indonesia
Kompleks Grand Wisata Block AA-10
No.3-5 Cibitung
Bekasi 17510, Indonesia
Phone: +62-21-8261-5808
Fax: +62-21-8261-5809
www.tungaloy.co.jp/id

Sunrox International, INC
No. 89, Chang An W. Road
Taipei TW, Taiwan
Phone: +886-2-2555-1111
Fax: +886-2-2556-3333
www.sunroxm.com.tw

Star Tooling CC
P.O. Box 11316
Selcourt 1567
Springs, South Africa
Phone: +27 011 818-2259
Fax: +27 011 818-2250
www.startooling.co.za

Alfita Co.,ltd
1-1318, Melezha str.
Minsk 220013, Belarus
Phone: +375296400911
Fax: +375172685054
www.mtool.by

S.C.Plastteh SRL
Str. Ioan Budai Deleanu Nr. 64
Cluj-Napoca 400474, Romania
Phone: +40 364-148940
Fax: +40 364-149956
www.tungaloy.ro

Member IMC Group

Tungaloy

ACCELERATED

MACHINING

www.tungaloy.com

www.tungforce.com